RAILWAY SIGNAL EQUIPMENT

TRANSCONTROL CORP.

PORT WASHINGTON, N.Y.

Transcontrol
A member of the Siemens Group

April 1, 1980

Mr. W. M. Wilder
Signal & Elect. Supervisor
Tuscola & Saginaw Bay Railway Co., Inc.
538 East Huron Street
Vassar, Missouri 48768

Dear Sirs:

We are pleased to inform you that we have moved our company into new premises; the address of which will be as follows:

Transcontrol Corporation
75 Marcus Drive
Melville, New York 11747
Telephone: (516) 249-6000
Telex: 645117

Furthermore, we wish to advise you that from today, Mr. Rudolf Gottesbueren has been appointed president of Transcontrol Corp. by the board of directors; whereas Mr. John M. Pelikan will become chairman of the board.

Trusting that the good relations which have subsisted may be continued.

Yours faithfully,

Rudolf Gottesbueren
President

John M. Pelikan
Chairman of the Board

Gbn/dmh

P.S. For a visit, please find a detailed map of Melville, Long Island.

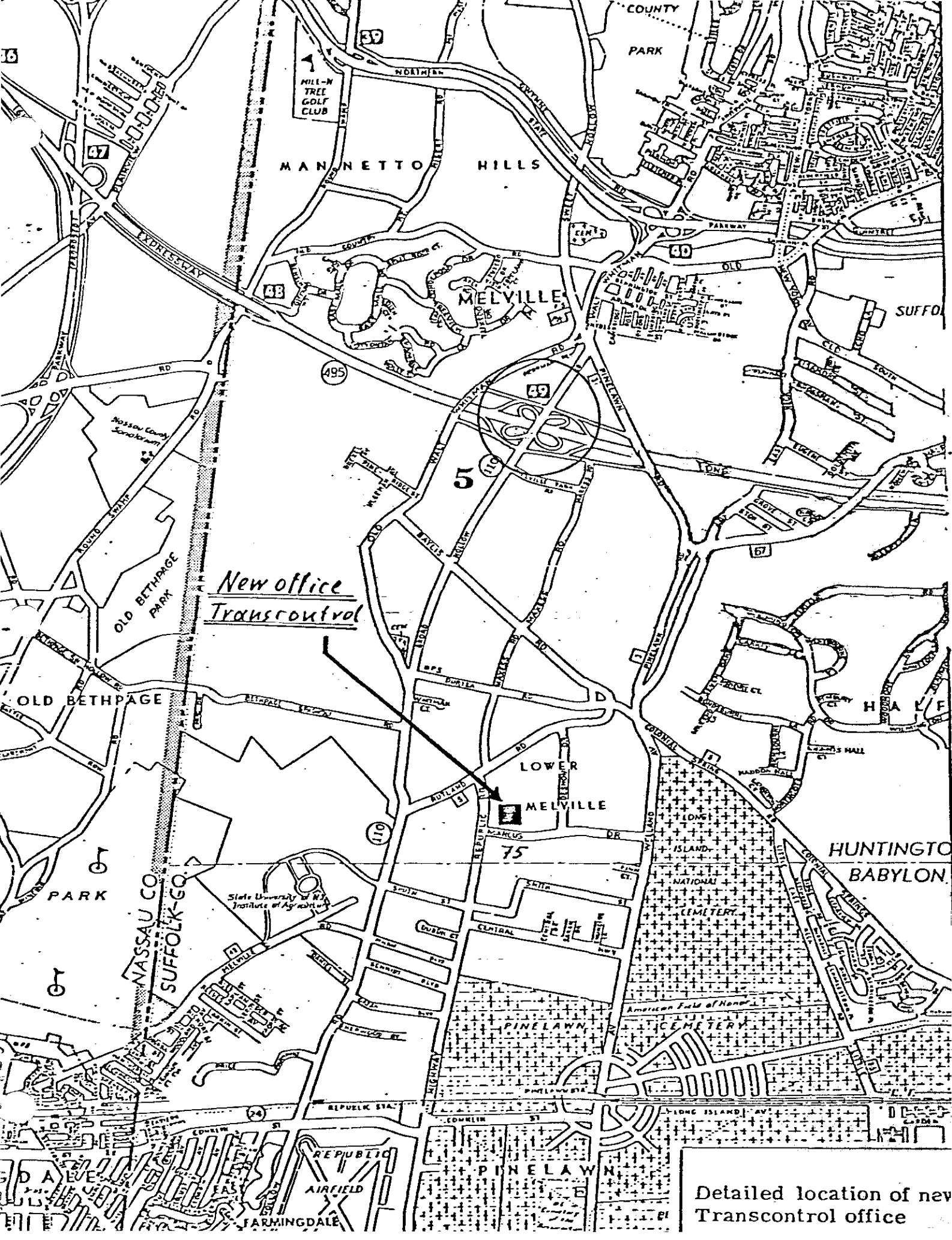

Detailed location of new
Transcontrol office

TRANSCONTROL CORPORATION INSTALLATIONS

(AS OF MARCH 1, 1977)

CENTRALIZED TRAFFIC CONTROL

Railroad	Location	No. of Functions	Type of System
C. M. ST.P&P. R.R. CO.	West Coach Yard to Woodale	165 Sw.-53 Sigs.	Solid State Control
	Oahe Reservoir	6 Sw.- 9 Sigs.	Relay Type Control
ConRail (Formerly Reading Co.)	Jenkin-Lansdale	56 Sw.-80 Sigs.	Solid State Control
	Fox Chase	37 Sw.-36 Sigs.	Solid State Control
	16th St.-Wayne Jct.	46 Sw.-50 Sigs.	Solid State Control
Long Island Rail Road	Merrick-Bellmore	6 Wired Instrument Cases, 150 Relays	Double Track Reverse Running
	Wantagh-Amityville	7 Wired Instrument Cases, 175 Relays	Double Track Reverse Running
	Hall-Nassau	23 Wired Instrument Cases, 575 Relays	Double Track Reverse Running
Muni Metro	San Francisco	20 Sw.-30 Sigs.	Cab Signalling
New York City Transit Authority	Flushing Line	10 Miles Rapid Transit	Renewal of Control System
Richmond, Fredericksburg & Potomac R.R. Co.	RO - JR	170 Sw.-190 Sigs.	System Consolidation
Taiwan Railways	Changhau-Taiwan	92 Sw. - 169 Sigs.	Relay Type Control
Toronto Transit Commission	Spadina Line	36 Sw.-84 Sigs.	Direct Wired Control
Western Maryland	Deal Connelsville	9 Sw.-10 Sigs.	Relay Type Control

TRANSCONTROL CORPORATION INSTALLATIONS

(AS OF MARCH 1, 1977)

INTERLOCKINGS

Railroad	Location	No. of Functions	Type of System
Belt Railway of Chicago	Lewayne Jct.	12 Sw.-14 Sigs.	PR1 Remote Control
Chicago-Western Indiana	Oakdale-Chicago	3 Sw.- 8 Sigs.	RD80 Remote Control
C.M.St.P.&P. R.R. Co.	Milwaukee Station	15 Sw.-24 Sigs.	PR1 Remote Control
	Grand Ave., Milwaukee	10 Sw.-14 Sigs.	RD80 Remote Control
	Tower A3, Chicago	10 Sw.-13 Sigs.	Direct Wired Remote Control
	B35, Chicago	3 Sw.- 7 Sigs.	SC29 Remote Control
	Red Wing, Minnesota	1 Sw.- 3 Sigs.	SC29 Remote Control
ConRail (Formerly Central Railroad of New Jersey)	WO Tower	8 Sw.- 8 Sigs.	RD80 Remote Control
	Port Reading	4 Sw.-10 Sigs.	RD80 Remote Control
	Brielle Craw.	2 Sw.- 4 Sigs.	Local Control
	XC Interlocking	19 Sw.-14 Sigs.	Direct Wire Remote Control
ConRail (Formerly Reading Co.)	Park-Nicetown	35 Sw.-56 Sigs.	Direct Wire Remote Control
ConRail (Formerly Penn. Central)	Grand River Axe. Lansing	6 Sw.-9 Sigs.	RD80 Remote Control
	10th St. Michigan City.	1 Sw.- 9 Sigs.	RD80 Remote Control
	Drawbridge-Mich. City.	4 Sw.- 8 Sigs.	SC29 Remote Control
	Collinwood, Ohio	8 Sw.- 9 Sigs.	PR2 Remote Control
	Waterman Ave.,Detroit	3 Sw.-11 Sigs.	PR2 Remote Control
Long Island Rail Road	Amityville	4 Sw.- 6 Sigs. 150 Relays	Solid State Control
	Freeport	1 Sw.- 8 Sigs. 100 Relays	Solid State Control
	Bellerose	5 Sw.-14 Sigs. 250 Relays	Solid State Control
	Great Neck	2 Sw.- 5 Sigs.	RD80 Remote Control
	World's Fair	8 Sw.- 9 Sigs.	Local Control
Norfolk & Western	Tidewater Jct.	6 Sw.- 9 Sigs.	RD80 Remote Control
	Carolina Jct.	8 Sw.- 7 Sigs.	RD80 Remote Control
R. F. & P. Railroad	RO-Seminary, Va.	57 Sw.-64 Sigs.	Consolidation
	Jr-AY-NA, Virginia	9 Sw.-98 Sigs.	Consolidation

TRANSCONTROL CORPORATION INSTALLATIONS

(AS OF MARCH 1, 1977)

YARDS

Railroad	Location	No. of Functions	Type of System
Bartd	Alameida Yard	31 Sw.-54 Sigs.	Direct Wire Control
	Richmond Yard	29 Sw.-45 Sigs.	Direct Wire Control
	Concord Yard	31 Sw.-44 Sigs.	Direct Wire Control
C.M.St.P.&P. R.R. Co.	S. Minneapolis Yard	22 Sw.-19 Sigs.	Direct Wire Control
	Milwaukee Cut-Off	30 Sw.-32 Sigs.	Direct Wire Control
ConRail (Formerly Penn. Central)	59th St. Yard, Chicago	41 Sw.	Classification Yard
	So. Receiving Yard, Det.	7 Sw.	PR2 Remote Control
	Hatboro, Pennsylvania	3 Sw.- 8 Sigs.	Direct Wire Control
Toronto Transit Commission	Wilson Yard	40 Sw.-97 Sigs.	Direct Wire Control
R. F. & P. Railroad	Potomac Yard No. Hump	50 Sw.	Classification Yard
	SO-RO	3 Sw.- 5 Sigs.	Direct Wire Control
	HR	2 Sw.- 4 Sigs.	Direct Wire Control
U. S. Steel	Saxonburg, Pa.	3 Sw.-10 Sigs.	Direct Wire Control
Western Maryland	Hagerstown, Md.	17 Sw.	Classification Yard
WAMATA	New Carrollton Yard	34 Sw.-54 Sigs.	Direct Wire Control

TRANSCONTROL CORPORATION INSTALLATIONS

(AS OF MARCH 1, 1977)

MISCELLANEOUS EQUIPMENT

Railroad	Project
Bartd	Three thousand (3000) PD-1 Relays used on Main Line Interlockings.
Long Island Rail Road	Fifty-five (55) HX Logic Units for Highway Crossings. One Hundred Twenty-five (125) Wire Instrument Cases for Highway Crossings.
L. M. Ericsson	Fifteen Hundred (1500) A1 and A2 Relays used in Taiwan.
New York City Transit Authority	Repair of Twelve hundred (1200) AC Track Relays GRS B2 and 2 A type, WABCO PTV42 & Mod. 15 type.
Penn Central	Rebuilding of GRS type K Relays on trade-in basis.
Various Railroads	Thousands of surplus relays of all types, rebuilt and resold and now giving perfect performance.

TRANSCO INSTALLATIONS

Now in service or on order

Railroad	Location	No. of Functions	Type of System	Type of Control Mach.
C.R.R. of N. J.	WO Tower	8 sw.-8 sig.	RD80 Remote Control	Unit Lever
	Port Reading	4 sw.-10 sig.	RD80 Remote Control	Rebuilt Union Style C 2'-6"
C.M. St. P. & P.R.R.	So. Minneapolis	22 sw.-19 sig.	Yard Control	Unit Lever
	Grand Ave.	10 sw.-14 sig.	RD80 Remote Control	Unit Lever
	Tower A3 Chicago	10 sw.-13 sig.	Direct Wire Remote Control	Unit Lever
	B35 Chicago	3 sw.-7 sig.	SC29 Remote Control	Unit Lever
	Redwing Minn.	1 sw.-3 sig.	SC29 Remote Control	Unit Lever
C. & W.I.R.R.	Oakdale Chicago	3 sw.-8 sig.	RD80 Remote Control	Unit Lever
L.I. R.R.	Great Neck L. I.	2 sw.-5 sig.	RD80 Remote Control Using Carrier	Unit Lever
	Worlds Fair L. I.	8 sw.-9 sig.	Local Control	Unit Lever
N.Y.C. R.R.	Grand River Ave. Lansing	5 sw.-5 sig.	RD80 Remote Control	Unit Lever
	10th St. Mich. City	1 sw.-9 sig.	SC29 Remote Control	Unit Lever
	Drawbridge Mich. City	4 sw.-8 sig.	SC29 Remote Control	Unit Lever
N. & W. Ry.	Tidewater Jct. Va.	6 sw.-9 sig.	RD80 Remote Control	Unit Lever
	Carolina Jct. Va.	8 sw.-7 sig.	RD80 Remote Control	Unit Lever
R.F. & P.R.R.	RO-Seminary Va.	57 sw.-64 sig.	Interlocking Consolidation	Line of Light Route Control
	JR-AY NA Va.	91 sw.-98 sig.	Interlocking Consolidation	Traffic Master type
READING CO.	AF Tower	6 sw.-6 sig.	SC29 Remote Control	Unit Lever Type
*TAIWAN Ry.	Changhua-Tainan	92 sw.-160 sig.	90 miles single track C.T.C.	Unit Lever
WESTERN MARYLAND	Deal Connelsville Md.	9 sw.-25 sig.	90 miles single track C.T.C.	Rebuilt Union Style C 5'-0"

**Transco Furnished Control Machine & Part Of Signal Relays.*

Transcontrol Corp.

2 Yennicock Avenue, Port Washington, N. Y.

Preprinted from RAILWAY SIGNALING & COMMUNICATIONS – October 1963

CONTROL MACHINES

TRANSCO CONTROL MACHINES

The brochures in this section show various TRANSCO control machines and local control panels. All cabinet work is of steel construction and quality levers and lights are used. Control machines are delivered completely wired and tested.

The size and shape of each control machine are custom designed to meet the specific requirements of each customer's system. It is not necessary to arrange your layout to fit some standard module or standard machine. The most logical and practical arrangement can be made and the control machine designed to fit.

Control machines and local control panels are provided with removable back panels and front panels when required for easy access to the internal wiring and components. Locks can be provided for these panels.

Front panels are usually provided with the layout and lettering etched in the panel material. Local control panels can be provided with less expensive panels if desired.

For any of your control machine requirements you will find it advantageous to request a quote from TRANSCONTROL CORP. for a machine to meet your specific requirement.

In conjunction with every control machine there is some amount of non-vital equipment used to form controls, store indications and interface with the control system. We provide this non-vital equipment in standard 19" communication racks. Swing racks mounted in enclosed cabinets can be provided. Relays generally used are Automatic Electric Class E or Class B.

Plug coupled cables can be provided between control machine and equipment racks or cabinets. With this arrangement we can completely test the central control office equipment before shipping, unplug for shipment, and reassemble when delivered with little or no testing required at that time.

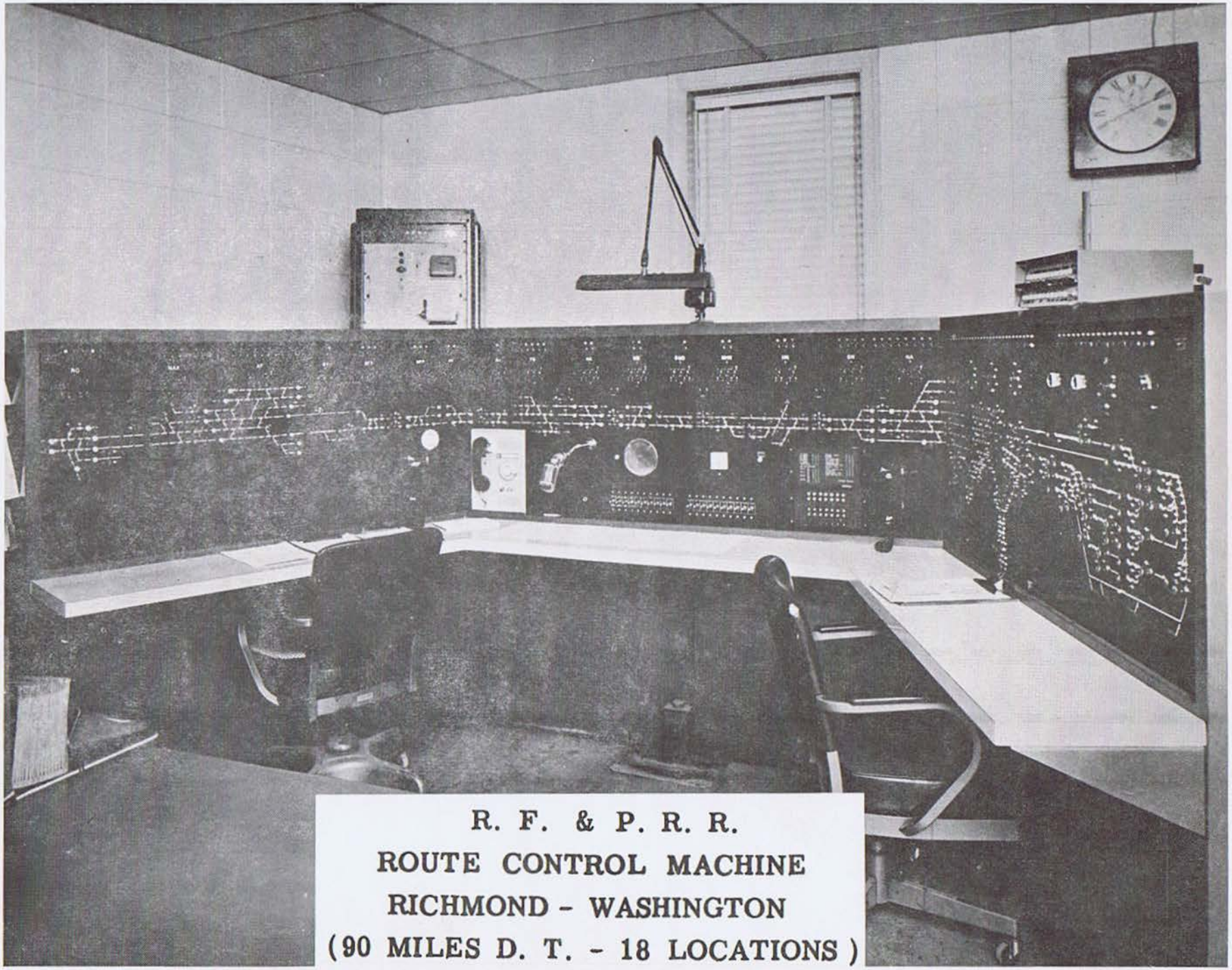

R. F. & P. R. R.
ROUTE CONTROL MACHINE
RICHMOND - WASHINGTON
(90 MILES D. T. - 18 LOCATIONS)

TRANSCO

ROUTE CONTROL SYSTEM

furnished for

READING COMPANY

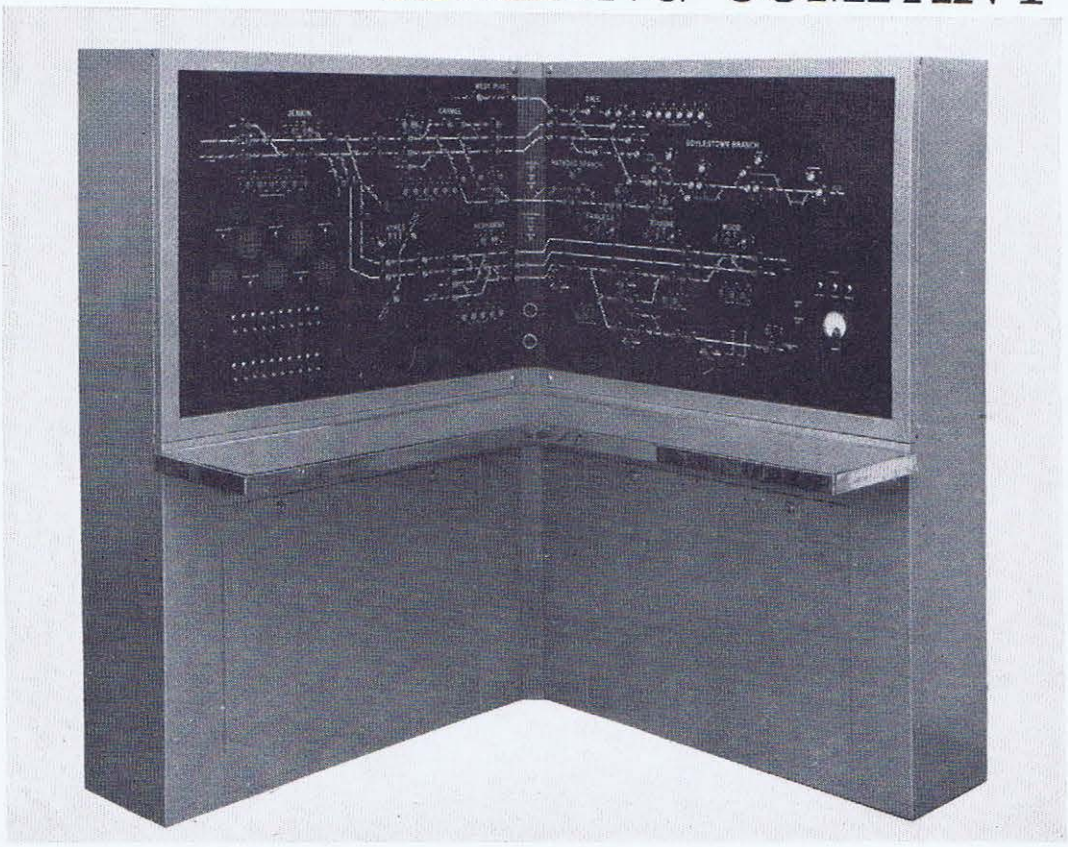

using solid state

PROVIDES CENTRALIZED CONTROL

of

11 INTERLOCKINGS
35 MILES OF DOUBLE TRACK
56 SWITCHES
86 SIGNALS

Transcontrol Corp.

TEL. PORT WASHINGTON 7-4500 • NO. 2 YENNICOCK AVE., PORT WASHINGTON, N. Y.

Reprinted from RAILWAY SIGNALING & COMMUNICATIONS October 1964

TRANSCO CONTROL MACHINE CUTS COSTS AND SAVES SPACE

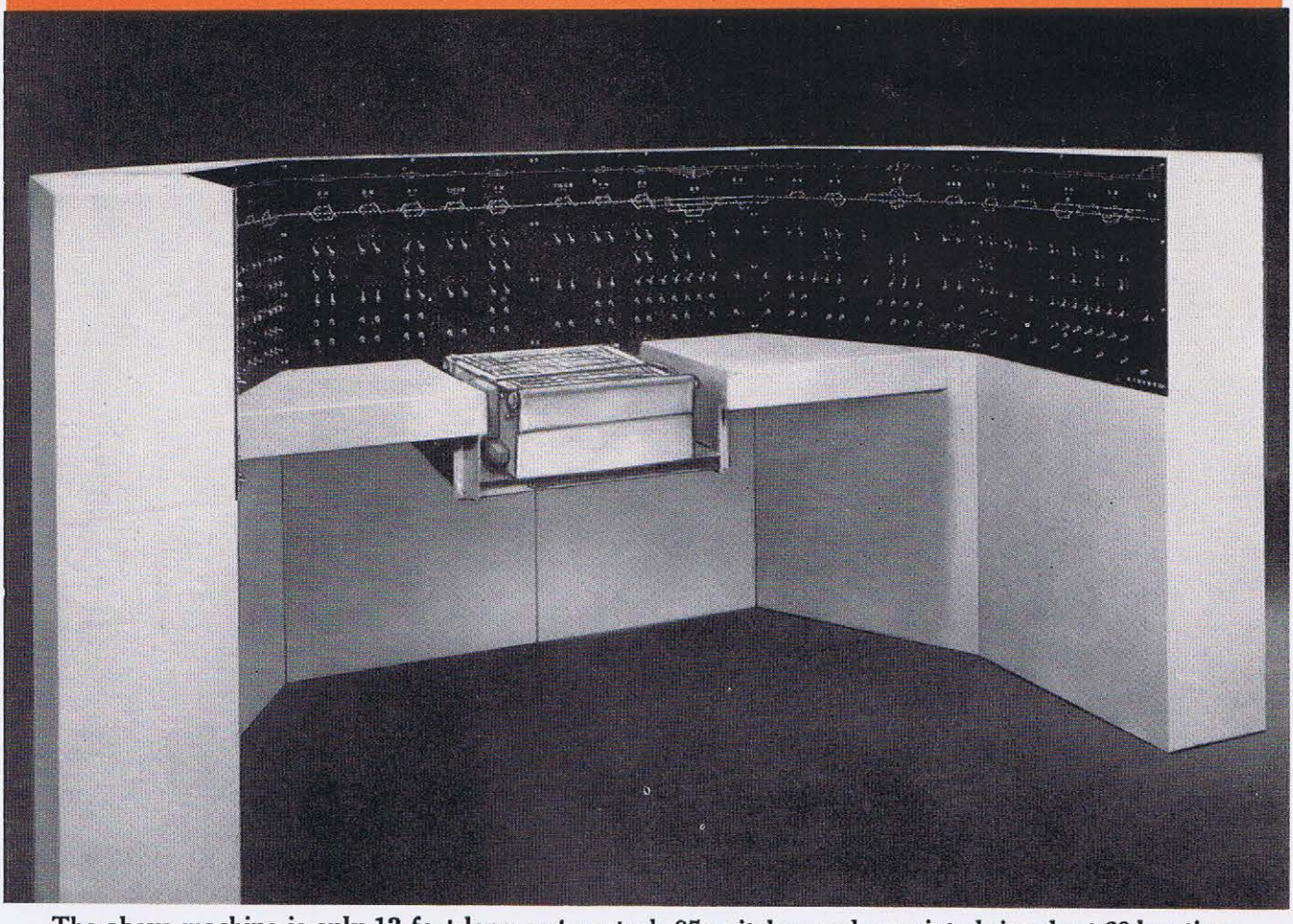

The above machine is only 12 feet long, yet controls 85 switches and associated signals at 60 locations.

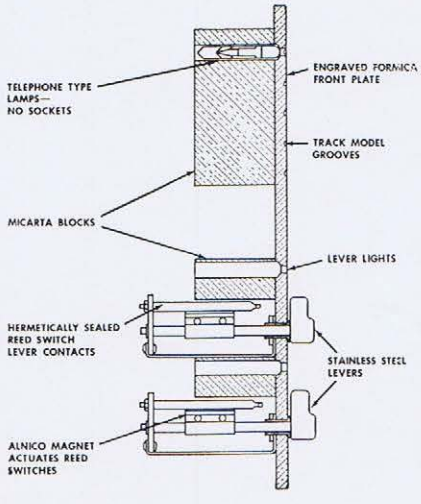

SALIENT FEATURES

1 Horizontal lever spacing 1⅝"—Vertical, 2⅛" —Makes for minimum width and permits 2-level design.

2 Trouble-free life with hermetically sealed, magnet operated lever contacts.

3 No lamp sockets—Permits maximum miniaturization.

4 Desk type or floor type—Front plate can be mounted at any angle.

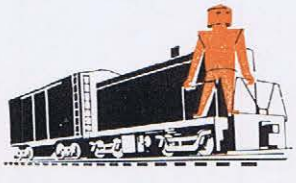

Transcontrol Corp.

2 Yennicock Avenue, Port Washington, New York

Reprinted from RAILWAY SIGNALING & COMMUNICATIONS, May, 1961

TRANSCO CONTROL *in service* MACHINES

1 **Taiwan Railway's C.T.C.**
85 Switch Levers—60 Signal Levers

2 **L.I. RR**
Remote Control of "Great Neck"
2 Sw. Levers
2 Sig. Levers
1 Traffic Lever

3 **C.R.R. of N.J.**
Remote Control of "WO"
6 Sw. Levers
2 Signal Levers

4 **RF&P RR**
RO to Seminary
Route Control
60 Route Push Buttons

5 **C&WI RR**
Remote Control of Oakdale
2 Sw. Levers
4 Sig. Levers
3 Traffic Levers

6 **CM St. P & P. RR**
Grand Avenue
8 Sw. Levers
5 Sig. Levers

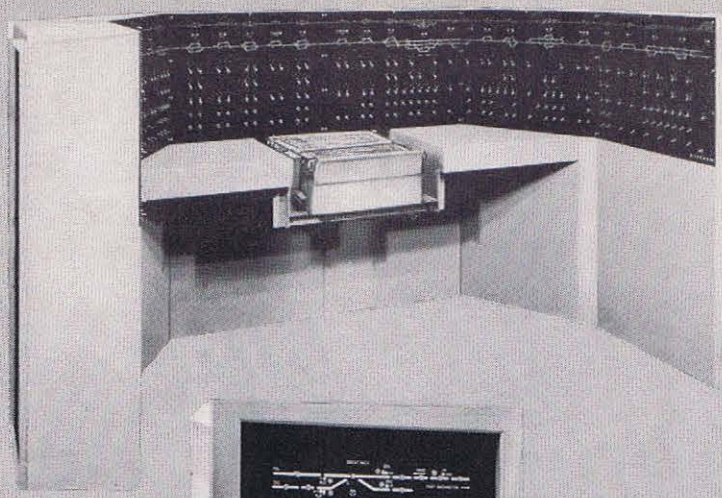

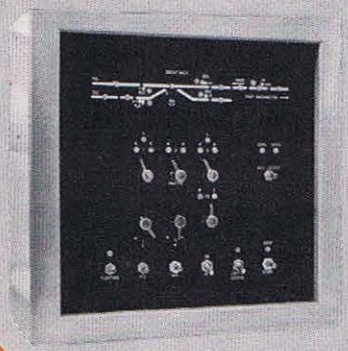

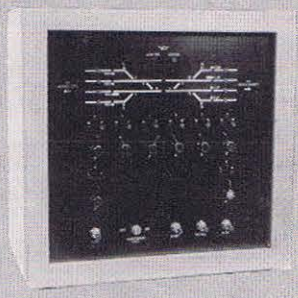

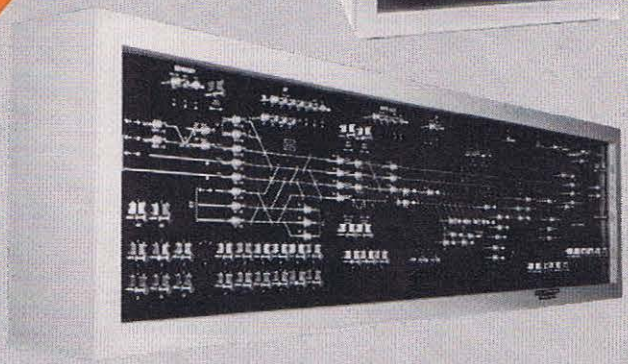

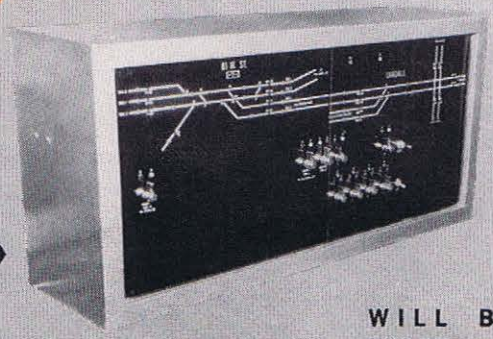

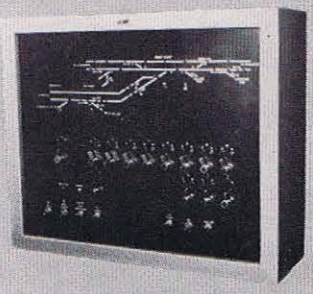

WILL BE IN SERVICE SOON

NYC RR . . . . Remote Control of Grand River Ave.
NYC RR . . . . Remote Control of 10th St.
CRR NJ . . . . Remote Control of Port Reading

Transcontrol Corp.

2 Yennicock Avenue, Port Washington, N. Y.

Preprinted from RAILWAY SIGNALING and COMMUNICATIONS, October

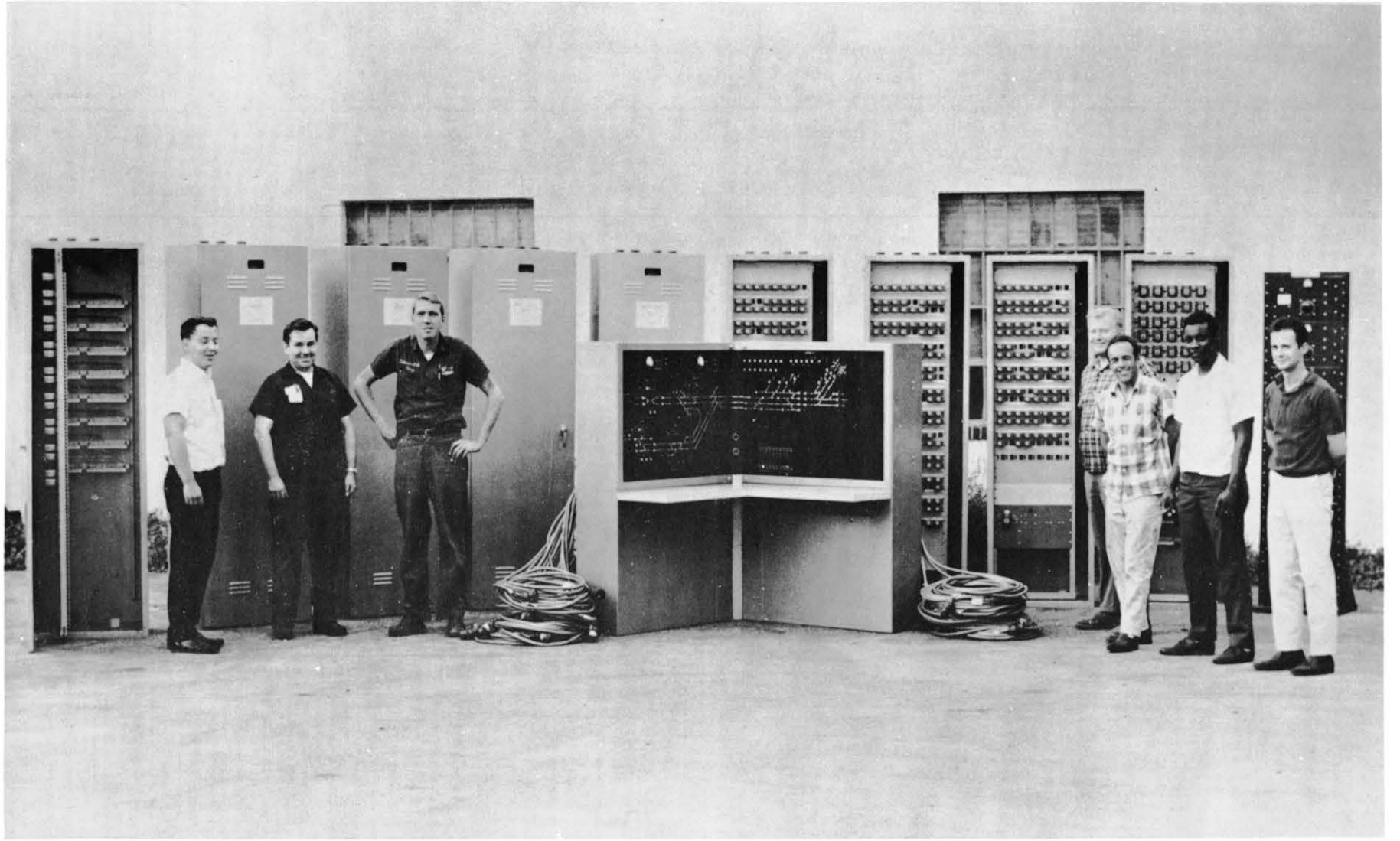

ROUTE CONTROL MACHINE
& ROUTE SELECTION CABINETS FOR
READING CO. NICETOWN INSTALLATIAN

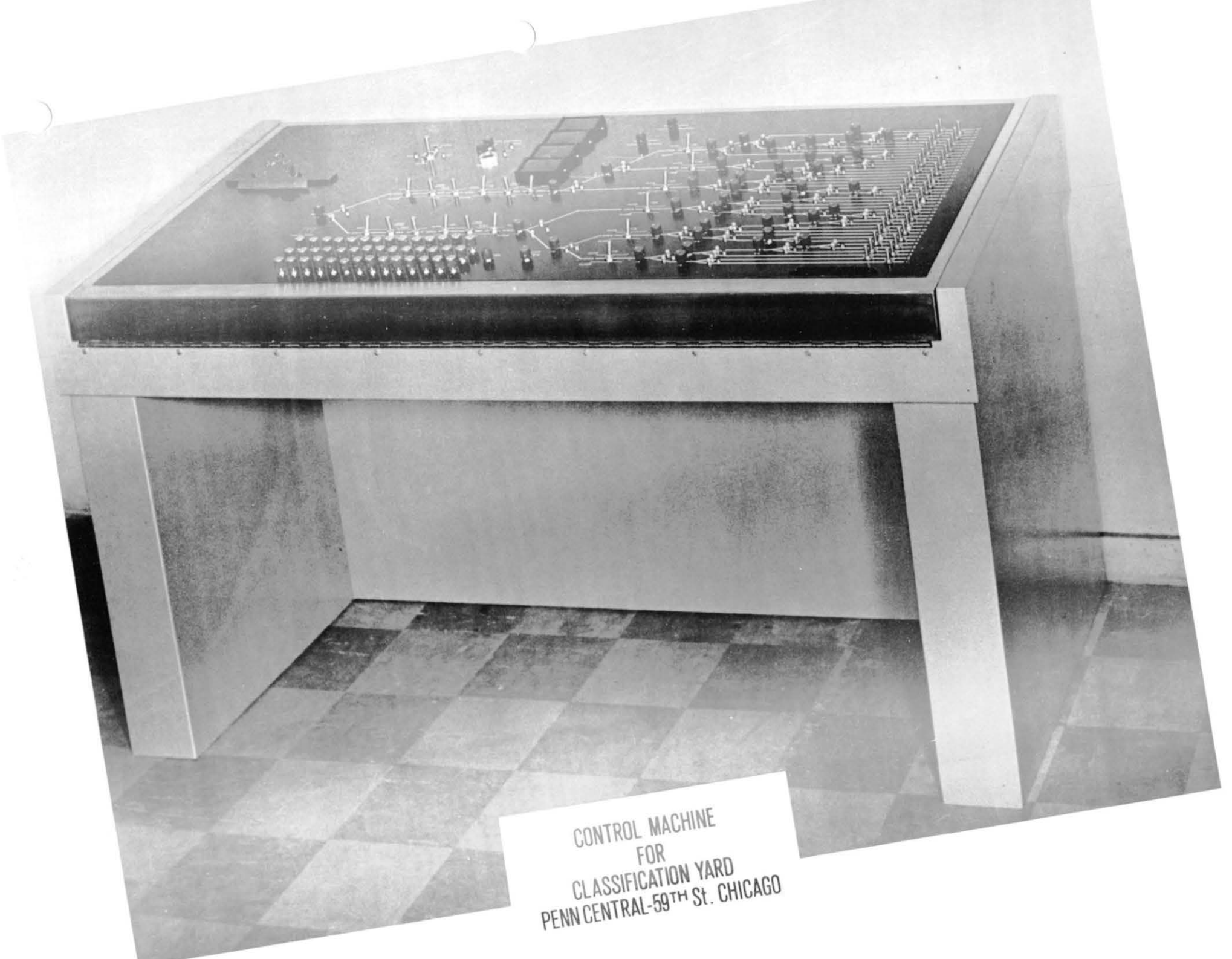

CONTROL MACHINE
FOR
CLASSIFICATION YARD
PENN CENTRAL-59TH St. CHICAGO

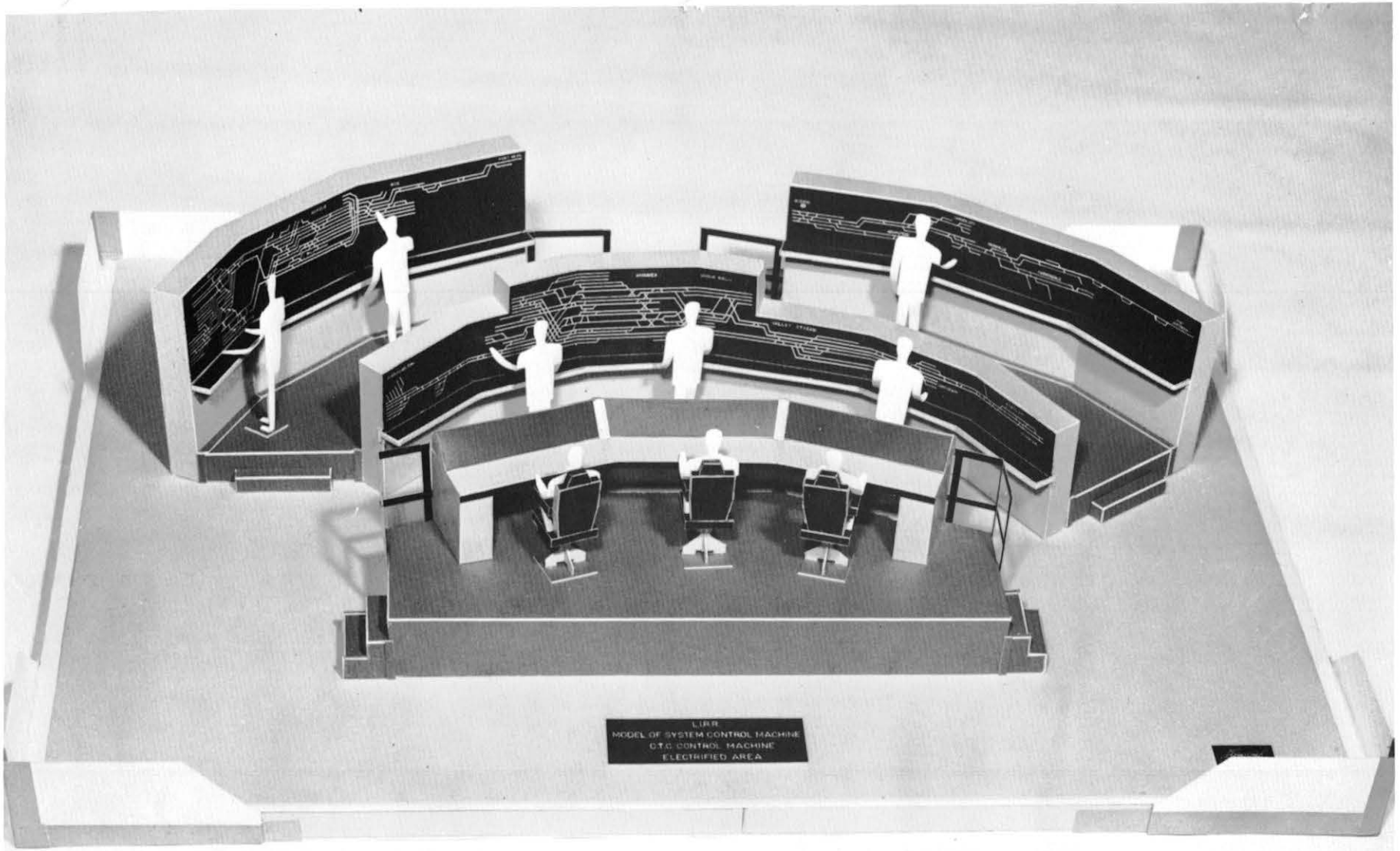

MOCK – UP" OF PROPOSED C.T.C. CONTROL MACHINE
FOR CONTROLLING WHOLE SYSTEM

TRANSCONTROL CORP.
PORT WASHINGTON, N.Y. 11050

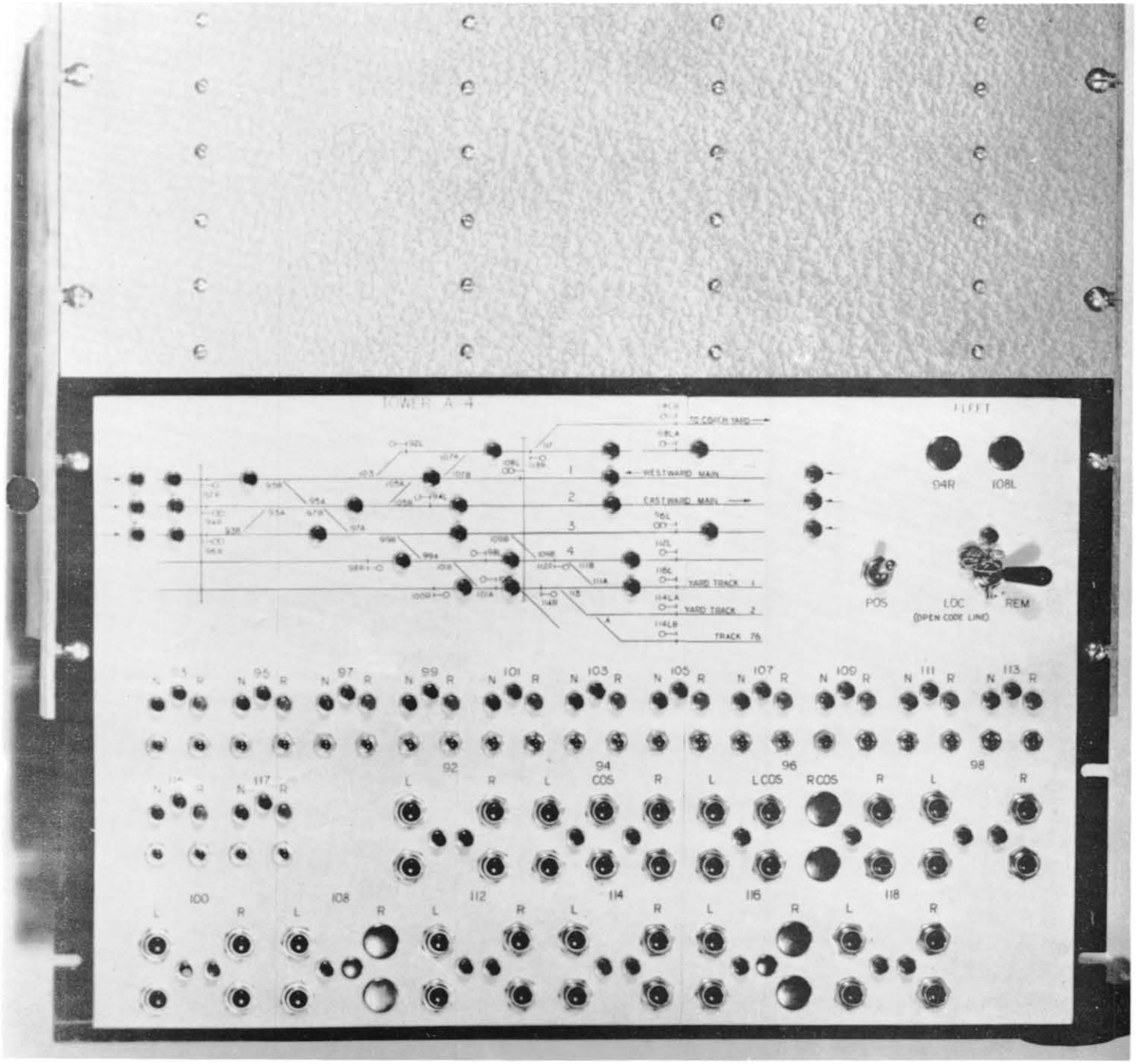

LOCAL CONTROL PANEL
MOUNTED ON 19" RACK
FOR
TOWER A4 CMSTP&PRR

CATALOG SECTION 1

UNIVERSAL LOCAL CONTROL BOX FOR END OF SIDING

The Universal local control box can be used for adding local control to any C.T.C. controlled end of siding merely by placing it on a relay shelf in a relay house and connecting the eyelets provided on the 10' cable which is part of the local control box to the already existing terminal posts on the field coding unit.

It is applicable to any of the common code control systems such as WABCO, 504, 506, 514 or GRS Type K. Circuit Plan A138, Sheets 1 and 2 show method of connection.

The track model section of the control box has a diagram on the reverse side. Thus, by disconnecting the amp taper tabs and pulling out the lamps, the track model can be reversed and/or turned end for end. The lamps are then reinserted in the new arrangement and the amp terminals reinserted in the plugs on the lamps and the track model section is refastened by four screws to the box. In this manner, it is possible to install the track model section in the four arrangements shown below.

Each control box is provided with a set of adhesive backed rectangular flat tags which can be inscribed with a pencil with the switch and signal numbers. A can of clear spray is also provided for protection of the lettering. After being marked and sprayed, these adhesive backed tags are installed on the top of the control box to identify the location.

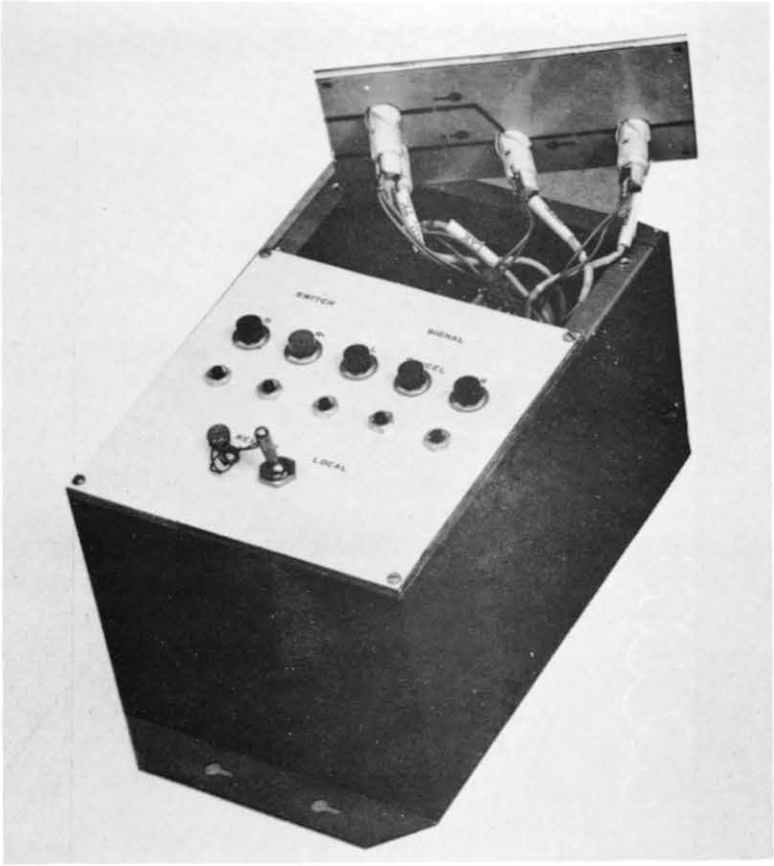

VIEW SHOWING REVERSIBLE PANEL

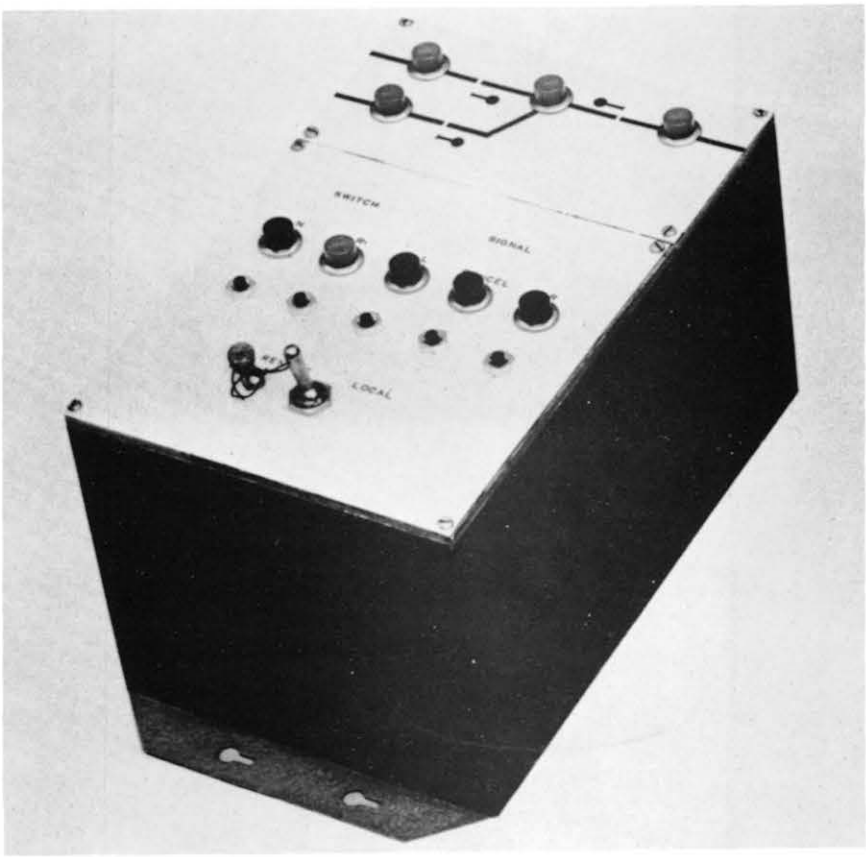

UNIVERSAL LOCAL CONTROL BOX FOR END OF SIDING

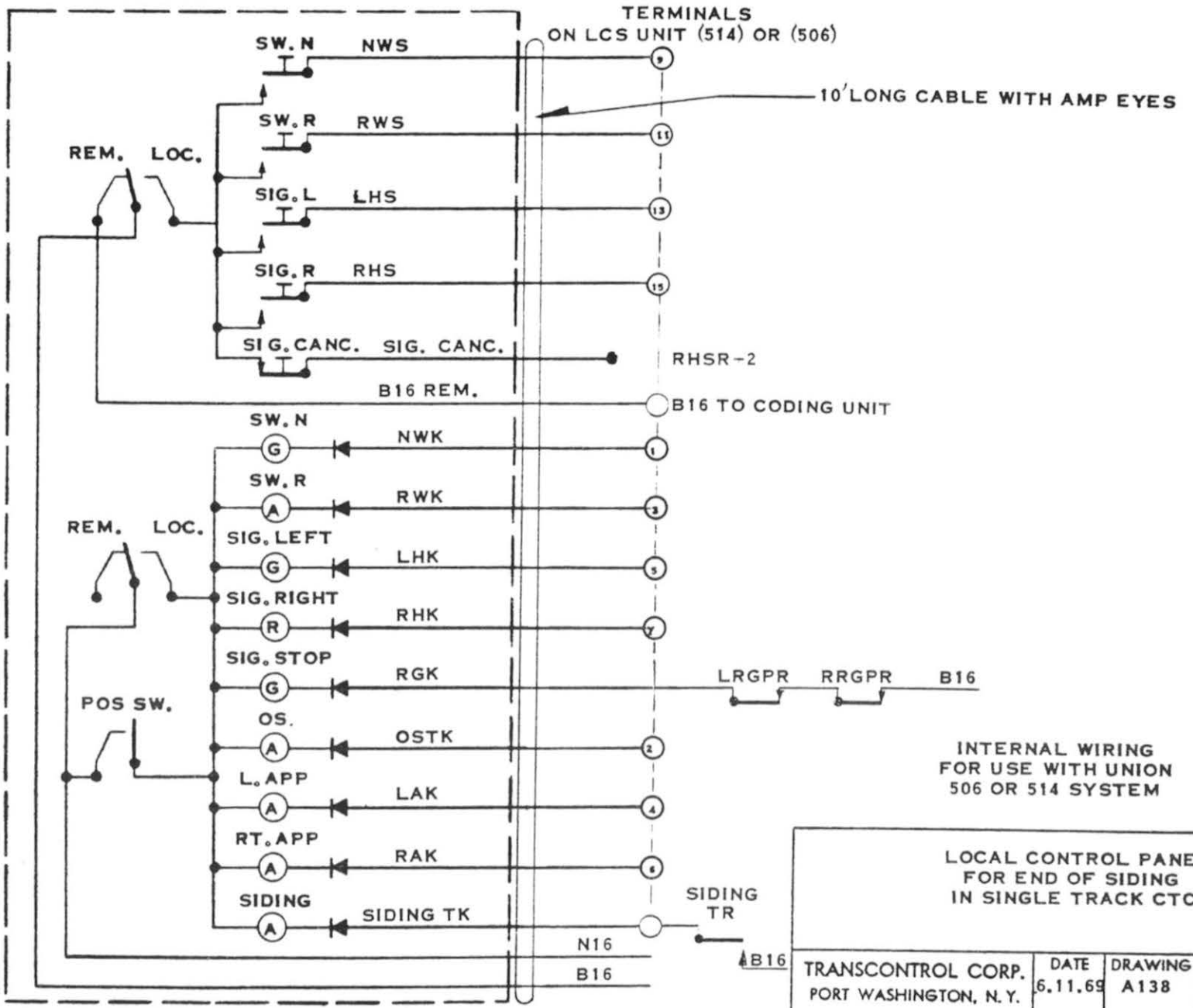

INTERNAL WIRING
FOR USE WITH UNION
506 OR 514 SYSTEM

LOCAL CONTROL PANEL
FOR END OF SIDING
IN SINGLE TRACK CTC

TRANSCONTROL CORP. PORT WASHINGTON, N.Y.	DATE 6.11.69	DRAWING A138	SH. NO. 1

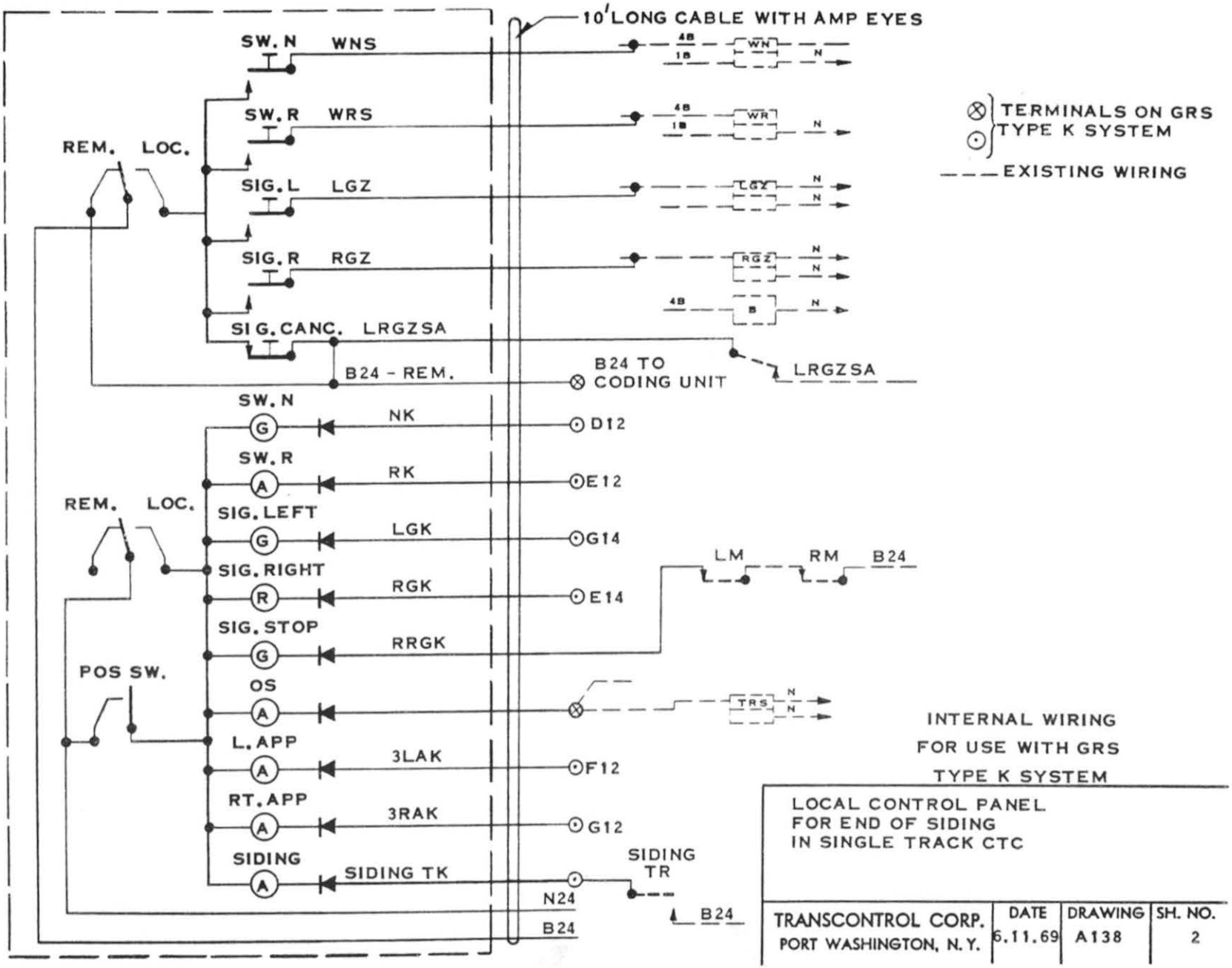
10' LONG CABLE WITH AMP EYES
SW. N
WNS
SW. R
WRS
REM.
LOC.
SIG. L
LGZ
SIG. R
RGZ
SIG. CANC.
LRGZSA
B24 - REM.
B24 TO CODING UNIT
LRGZSA
TERMINALS ON GRS TYPE K SYSTEM
EXISTING WIRING
SW. N
NK
D12
SW. R
RK
E12
SIG. LEFT
LGK
G14
SIG. RIGHT
RGK
E14
SIG. STOP
RRGK
LM
RM
B24
POS SW.
OS
L. APP
3LAK
F12
RT. APP
3RAK
G12
SIDING
SIDING TK
SIDING TR
N24
B24
B24
INTERNAL WIRING
FOR USE WITH GRS
TYPE K SYSTEM
LOCAL CONTROL PANEL
FOR END OF SIDING
IN SINGLE TRACK CTC
TRANSCONTROL CORP.
PORT WASHINGTON, N.Y.
DATE
6.11.69
DRAWING
A138
SH. NO.
2

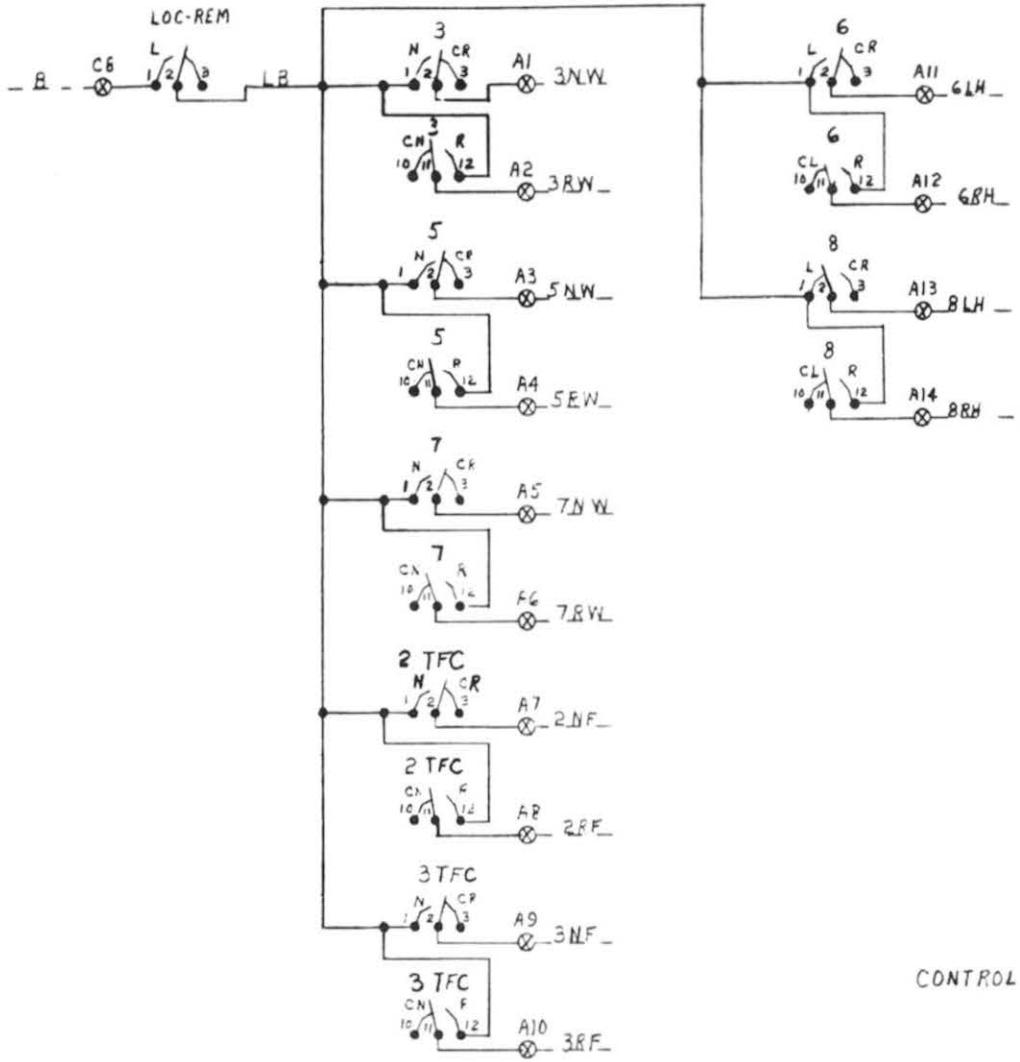

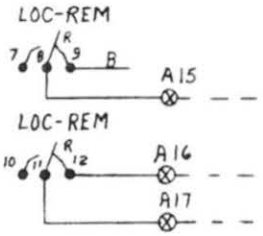

CONTROL CIRCUITS

TYPICAL LOCAL CONTROL MACHINE CIRCUITS			
			RLR
TRANSCONTROL CORP. PORT WASHINGTON, N.Y.	DATE 10-13-62	DRAWING B2	SH. NO. 1

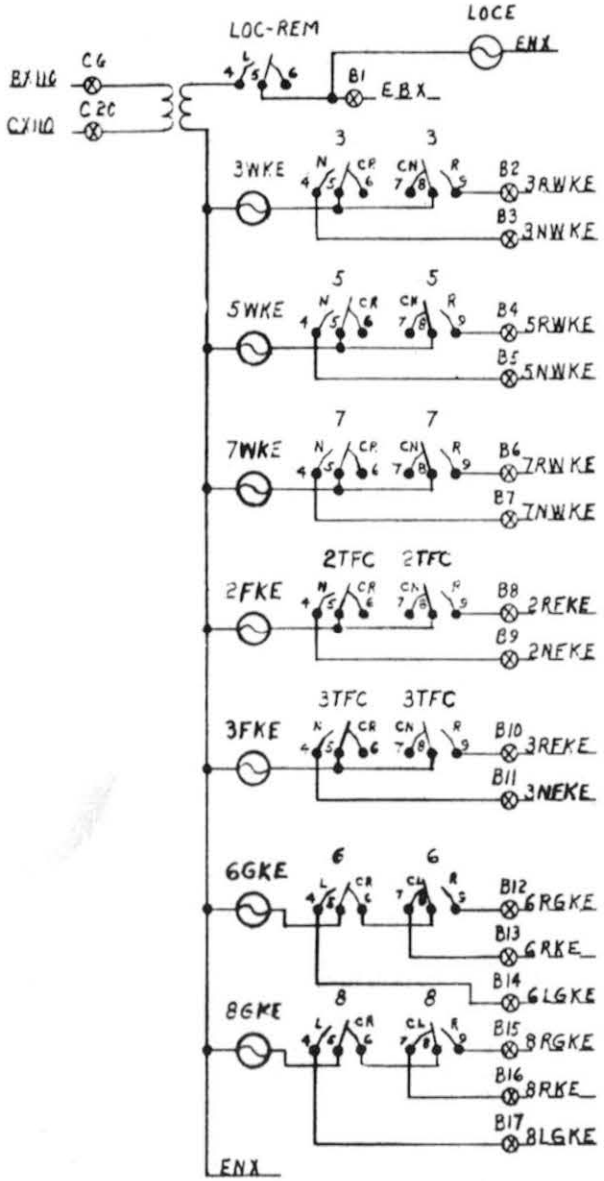

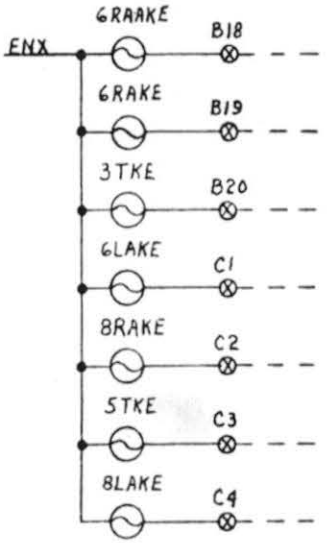

IND. LIGHTING CIRCUITS

TYPICAL LOCAL CONTROL MACHINE CIRCUITS

RLR

TRANSCONTROL CORP. PORT WASHINGTON, N.Y.	DATE	DRAWING	SH. NO.
	10-13-62	82	2

CONTROL SYSTEMS

TRANSCO B90 CONTROL SYSTEM

The TRANSCO B90 control system is a normally quiescent solid state system using combinations of narrow band carrier channels for transmitting controls or indications over a pair of wires or over a voice band carrier.

Controls and indications are sent simultaneously. Operating time is 25 control and indication steps per second.

The system uses RFL frequency shift narrow band carriers and Automatic Electric Class E relays. Relay operation is no more than one operation per burst of carrier.

The maximum capacity of the system on one voice channel is 1046 control and indication steps which can be distributed in any manner. The system can be expanded by using a separate voice carrier for each 1046 controls and indications.

Circuits for a B90 system providing 96 controls and 96 indications are shown on Drawing B90.

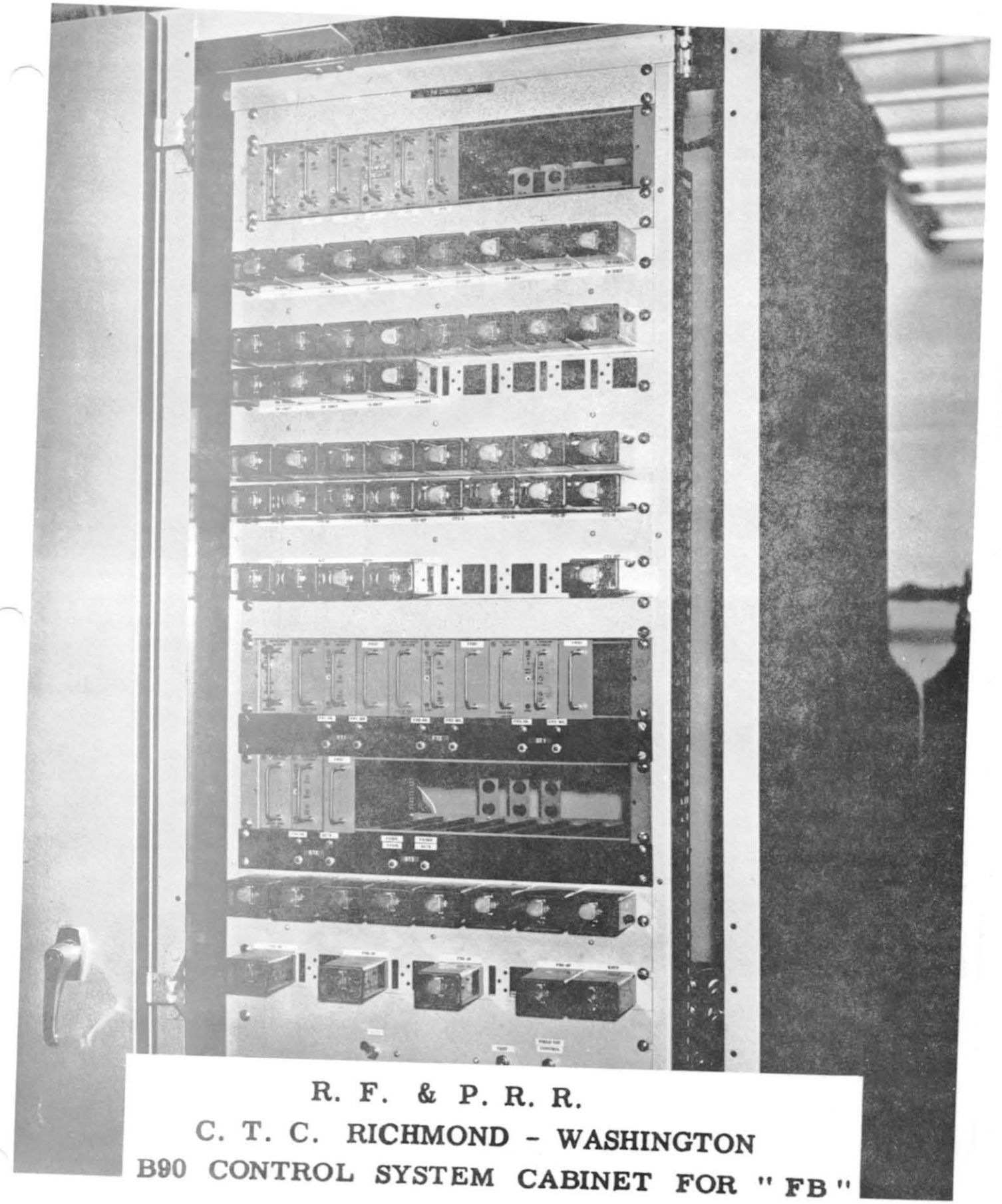

R. F. & P. R. R.

C. T. C. RICHMOND - WASHINGTON

B90 CONTROL SYSTEM CABINET FOR " FB "

R. F. & P. R. R.
C. T. C. RICHMOND - WASHINGTON
CABINETS AT CONTROL CENTER

TRANSCO PR2 CONTROL SYSTEM

The TRANSCO PR2 control system is applicable for remote control locations having light to medium traffic.

It uses plug-in type, easily removable 30 point steppers and plug-in relays. The office and field units are interchangeable.

The basic system operates on a D.C. line and provides 29 controls and 29 indications. Total operating time is approximately three seconds. It is expandable by using RFL frequency shift carrier channels. Maximum expansion can provide 87 controls and 87 indications with one basic stepping mechanism and two frequency shift channels in each direction. The system is extremely low cost because the basic stepper system can be used to send and receive up to 3 controls and 3 indications simultaneously on each step. A system using a basic D.C. line and two frequency shift carrier channels in each direction can send 87 controls and 87 indications in three seconds. The system is normally quiescent.

The PR2 system can be furnished as a multiple station system using one office unit and one field unit at each location with a carrier assignment in each direction for each field location. Its maximum capacity is 12 indications each.

The office and field unit is mounted on a 19" communication rack in a cabinet with the input and output relays.

The normal power supply is 24 volts D.C.

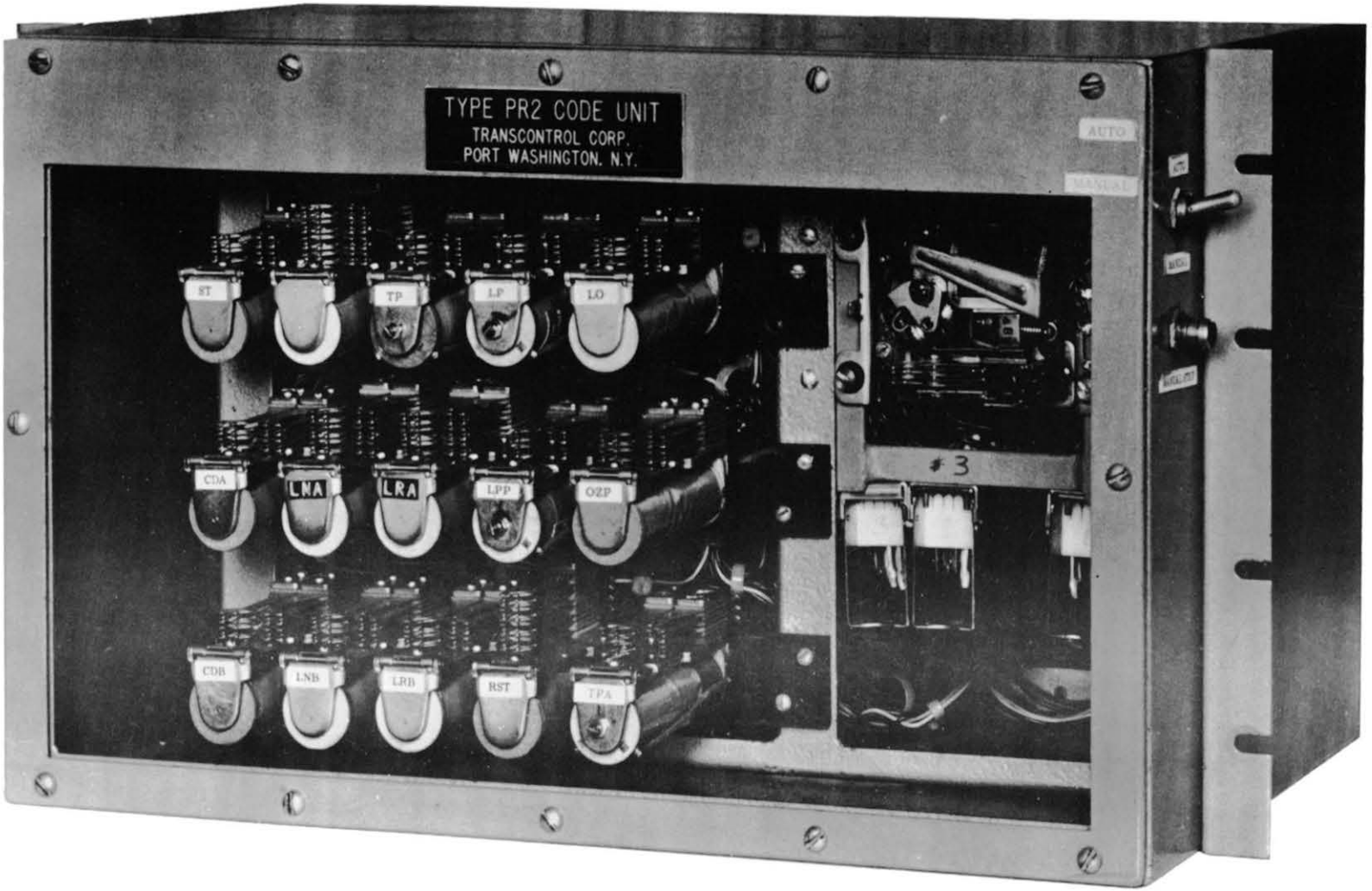

PR2 CODE UNIT

TRANSCO

MULTIPLE STATION TIME CODE CONTROL SYSTEMS

Rugged design—Low Cost—Interchangeable

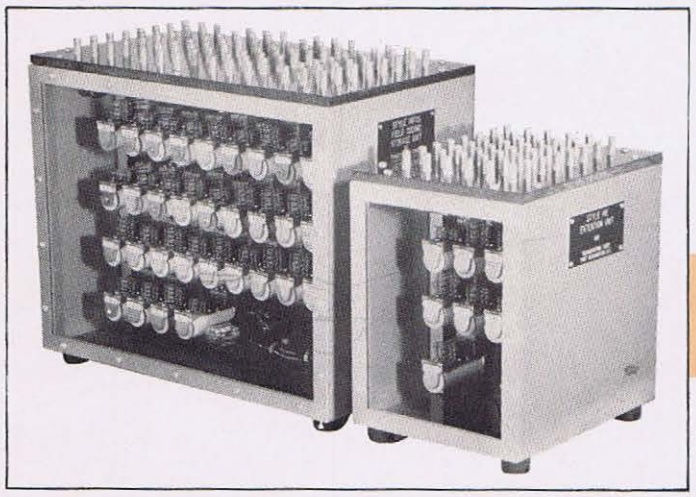

STYLE 14 SYSTEM

left
14FCS Field Coding Storage Unit

right
14E Extension Unit

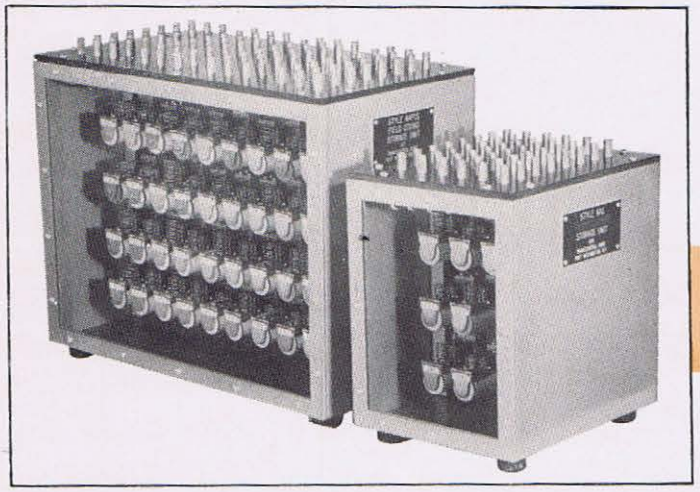

STYLE 6 SYSTEM

left
6AFCS Field Coding Storage Unit

right
6AS Field Storage Unit

SALIENT FEATURES

1. D.C. system capacity—35 stations with 7 controls and 7 indications at each station.
2. Several systems can be installed on one line by use of carrier.
3. Office and field units completely interchangeable with Union 514 & 506 systems.
4. Relay life expectancy, 300 to 400 million operations.
5. Transistorized FS carrier channels, plug boards and output units available.

Transcontrol Corp.

TEL. PORT WASHINGTON 7-4500 • NO. 2 YENNICOCK AVE., PORT WASHINGTON, N. Y.

Reprinted from RAILWAY SIGNALING & COMMUNICATIONS September, 1964

TRANSCO YARD CONTROL SYSTEM

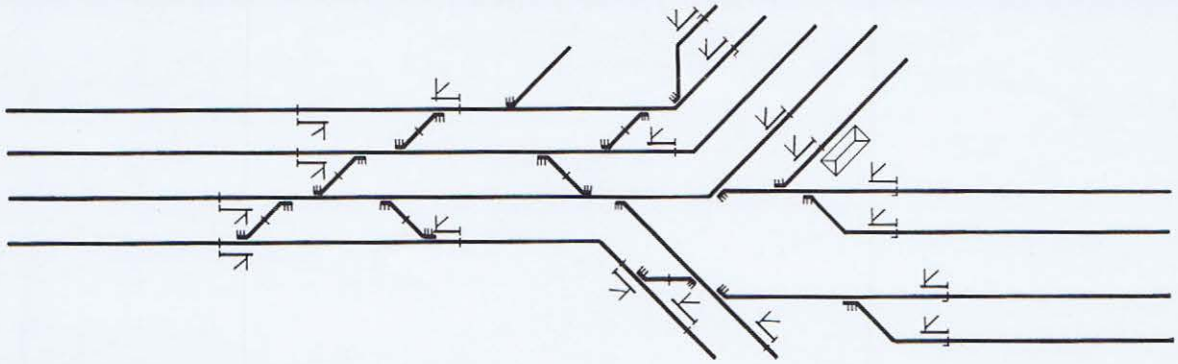

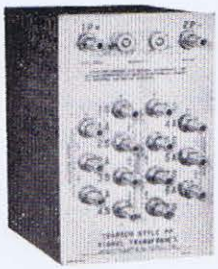

TRANSFORMER

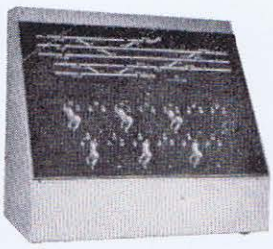

CONTROL MACHINE

RELAY

SWITCH MOVEMENT

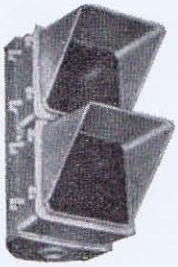

SIGNAL

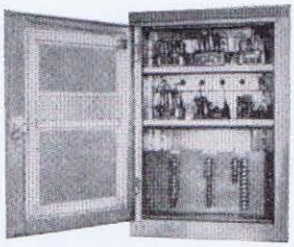

INSTRUMENT CASE

Cost of Transco signal equipment for above layout consisting of 22 switch layouts, 20 dwarf signals, and 17 track circuits is approximately $48,000.*

**includes control machine, switch movements, signals, relays, rectifiers, transformers and housing but does not include cable.*

Transcontrol Corp.

2 Yennicock Avenue, Port Washington, N.Y.
Tel. PO 7-4500

Reprinted from RAILWAY SIGNALING & COMMUNICATIONS, July, 1961

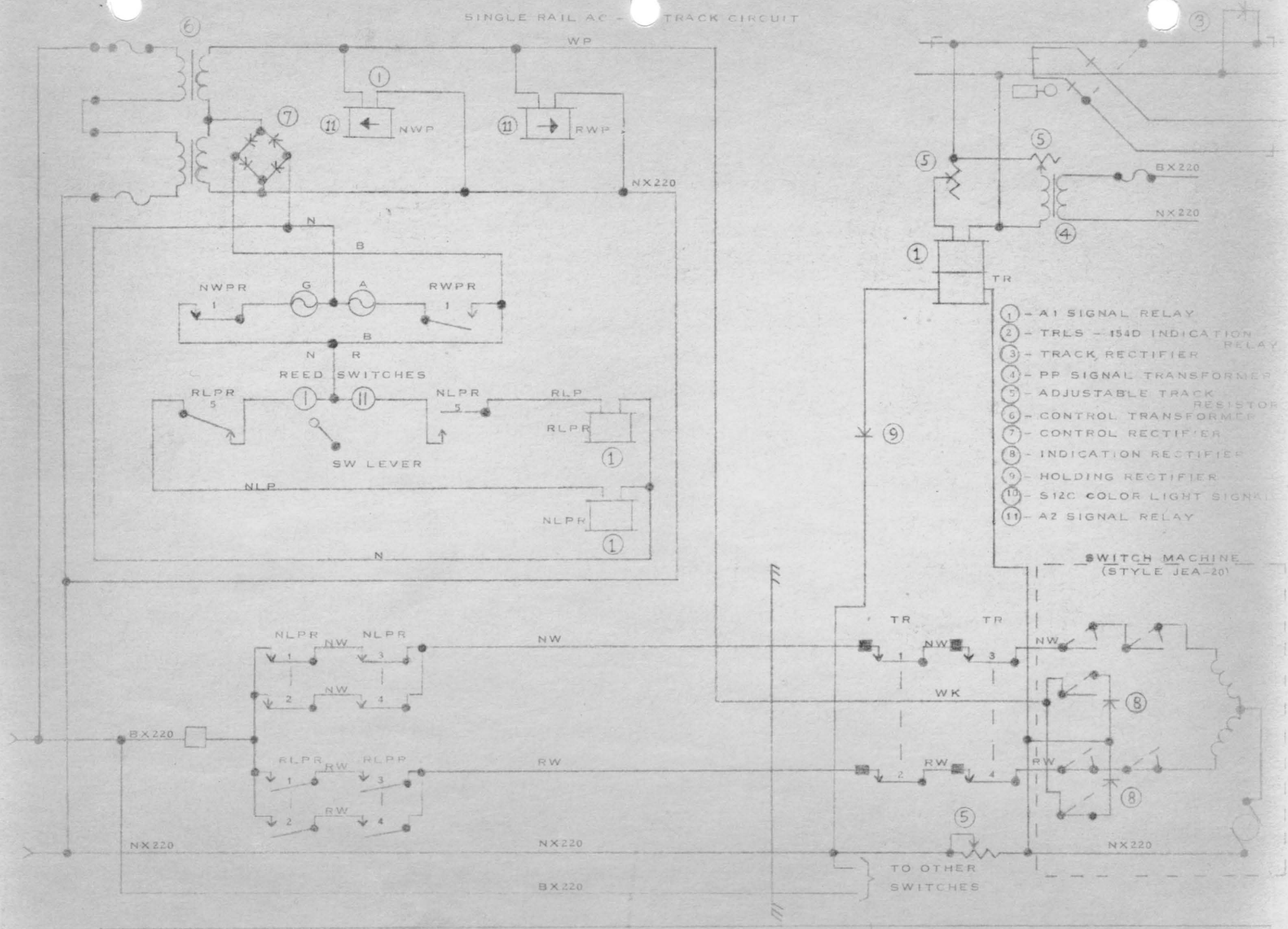

SEPT. 9 1957
REV. 1 - OCT. 12, 1957
REV. 2 - SEPT. 14, 1957
REV. 3 - AUG. 23, 1962

TRANSCO YARD CONTROL SYSTEM

TYPICAL CIRCUITS - LOCAL CONTROL
SWITCH CONTROL - LOCKING AND INDICATION

TRANSCONTROL CORPORATION
PORT WASHINGTON, NEW YORK
SK-238
SH. 1

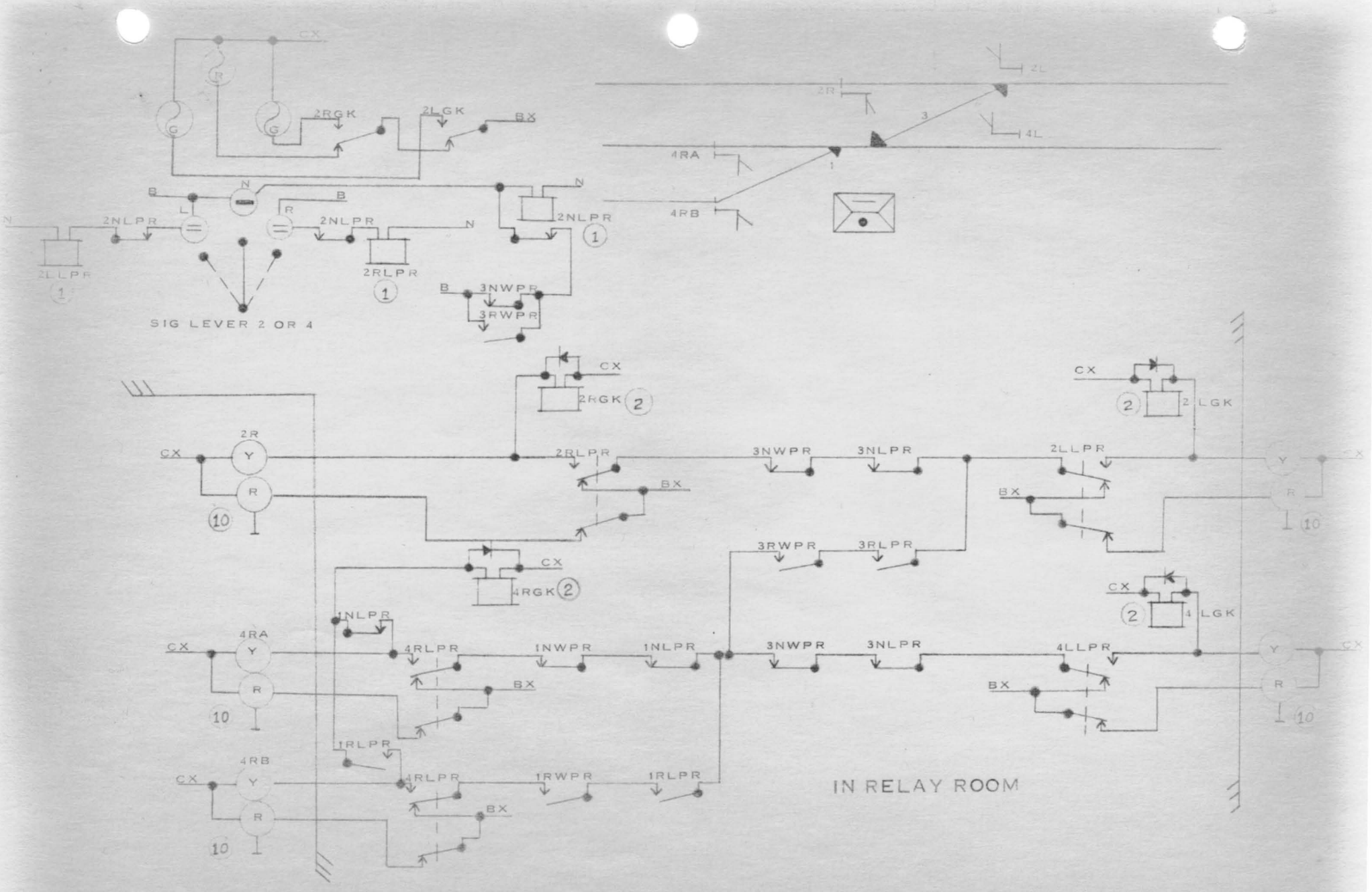

TRANSCO YARD CONTROL SYSTEM

SEPT. 9, 1957
REV. OCT. 12, 1957
REV. MAR. 4, 1958

TYPICAL CIRCUITS - LOCAL CONTROL
SIGNAL CONTROL AND INDICATION

SK-238
SH. 2

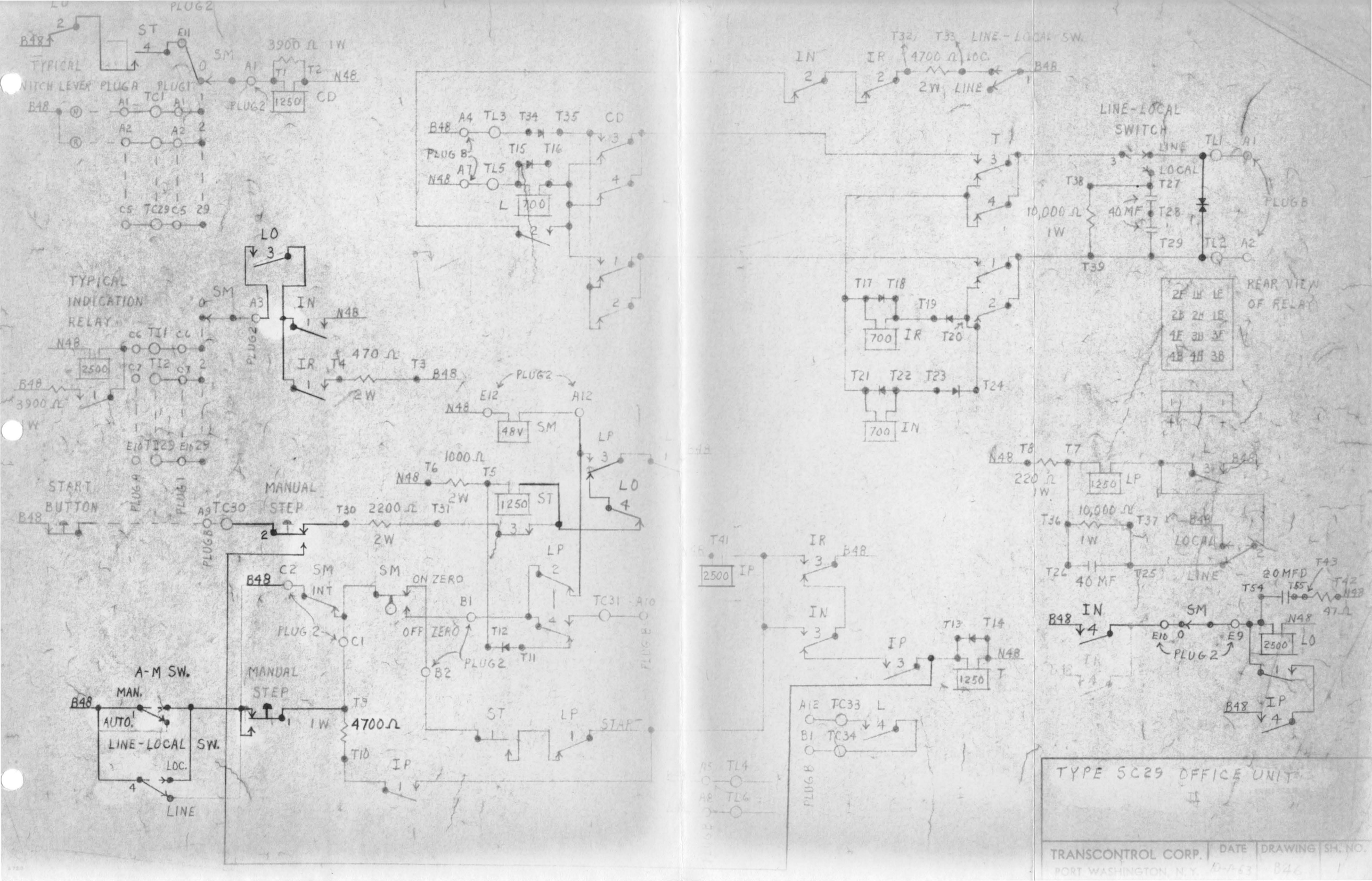
TYPICAL SWITCH LEVER
PLUG A
PLUG 1
PLUG 2
ST
SM
3900 Ω 1W
N48
CD
1250
TYPICAL INDICATION RELAY
2500
3900 Ω 1W
LO
IN
IR
470 Ω
2W
START BUTTON
MANUAL STEP
1000 Ω
2200 Ω
2W
1250
ST
LP
LO
INT
ON ZERO
OFF ZERO
A-M SW.
MAN.
AUTO.
LINE-LOCAL SW.
LOC.
LINE
4700 Ω
1W
START
PLUG B
LINE-LOCAL SW.
4700 Ω
LOC.
2W
LINE
LINE-LOCAL SWITCH
LINE
LOCAL
10,000 Ω
1W
40 MF
REAR VIEW OF RELAY
2F 1H 1F
2B 2H 1B
4F 3H 3F
4B 4H 3B
220 Ω
1W
10,000 Ω
1W
40 MF
20 MFD
47 Ω
TYPE SC29 OFFICE UNIT
II
TRANSCONTROL CORP.
PORT WASHINGTON, N.Y.
DATE
DRAWING
SH. NO.
B46
1

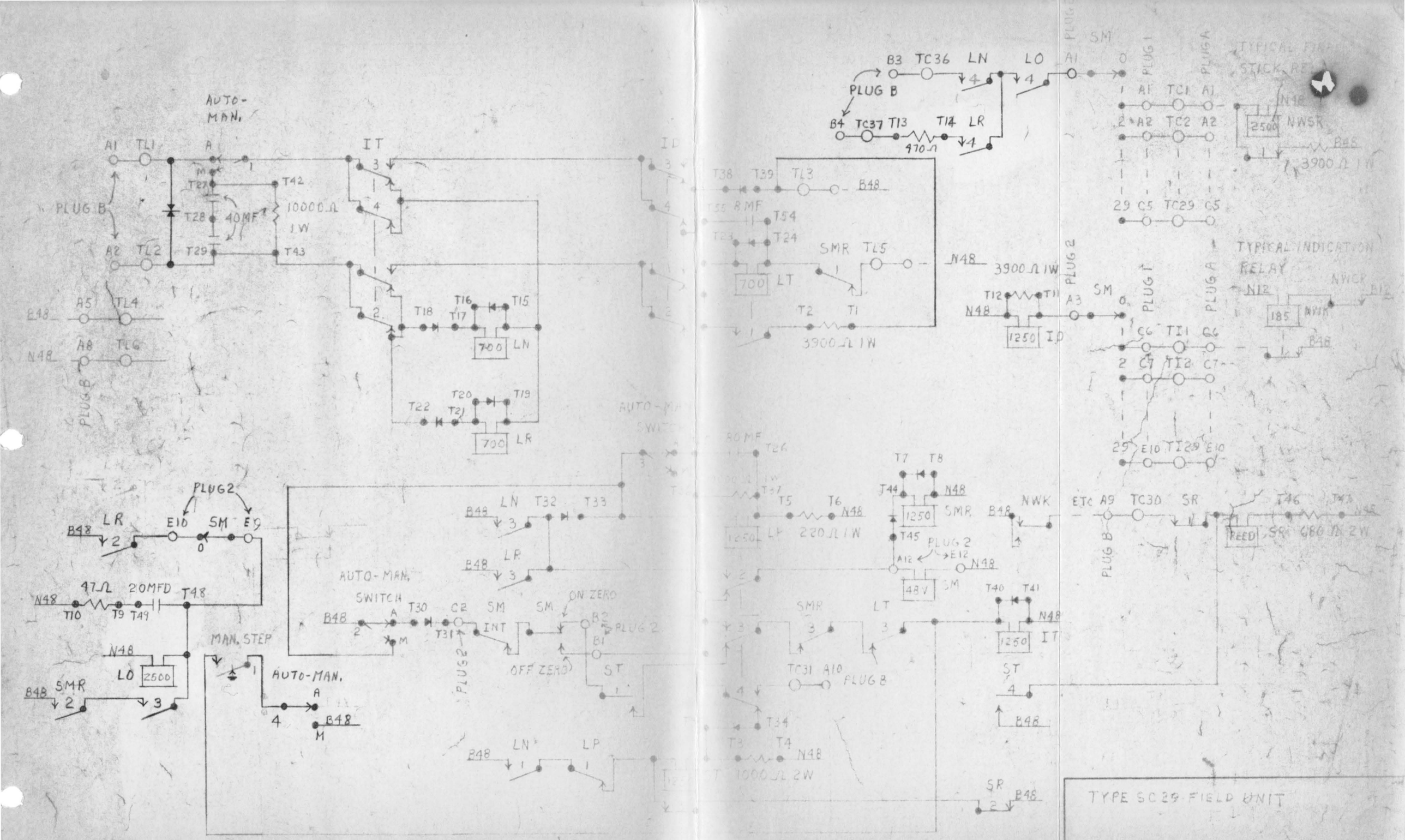
AUTO-MAN.
PLUG B
PLUG 2
MAN. STEP
AUTO-MAN.
AUTO-MAN. SWITCH
ON ZERO
OFF ZERO
TYPICAL FINAL STICK RELAY
TYPICAL INDICATION RELAY
TYPE SC29 FIELD UNIT
TRANSCONTROL CORP.
PORT WASHINGTON, N.Y.
DATE 10-1-63
DRAWING B46
SH. NO.

SIGNALS

inter-city
U MFG. CO. INC.
ST. LOUIS, MO. 63132

TRANSCO AA5 ALUMINUM SIGNAL

Using 8 3/8″ Doublet Lenses

3 COLOR

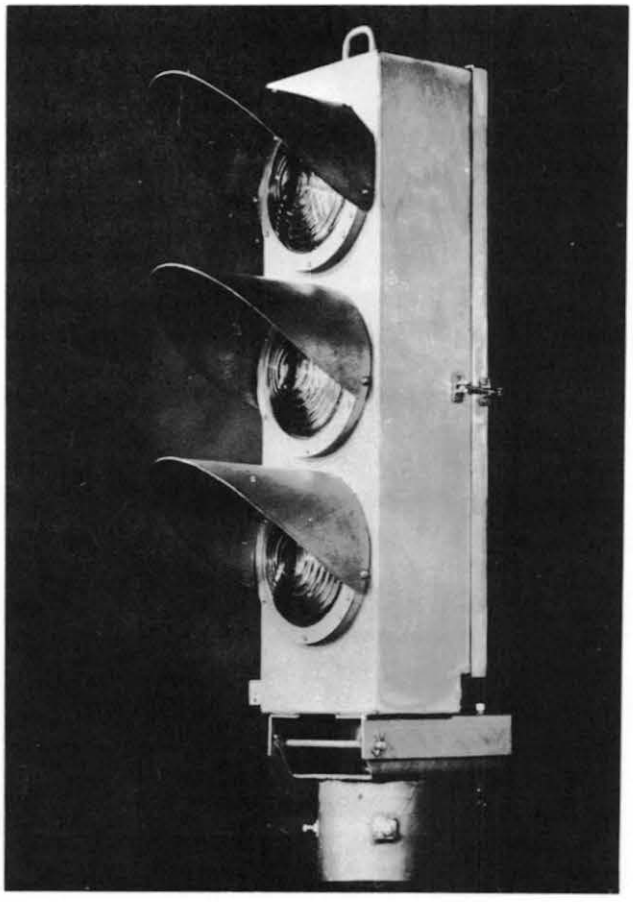

SALIENT FEATURES

1. Weight 65 lbs. as shown.
   (This is 1/3 the weight of equivalent C.I. Signal)
2. Uses Doublet Lense System which is completely interchangeable with Union P5 & R2 Signals.
3. Furnished with 1/8″ thick aluminum background.
4. Arranged for horizontal and vertical adjustment.
5. Has built in sighting device.
6. Doublet Lense unit can be replaced by one man.
7. Low Price.

Transcontrol Corporation

2 YENNICOCK AVE., PORT WASHINGTON, N. Y.

Phone: POrt Washington 7-4500

TRANSCO AA5 ALUMINUM COLORLIGHT SIGNAL

TRANSCO AA5 Aluminum Signals have been designed to provide the advantages of modern materials, light weight and low maintenance, at the same time retaining the standard form and using the 8-3/8" doublet lens. This lens unit is completely interchangeable with WABCO P5 and R2 lenses. As an example of the advantage in weight, a 3 unit TRANSCO AA5 signal without background weighs 65 lbs., which is 1/3 the weight of a comparable cast iron signal. This weight advantage provides easier handling, lower shipping costs, and easier installation. The signal housing and base are aluminum and all other parts, such as bolts, nuts, pivot rod and lifting ring are stainless steel. The background also is of aluminum.

Other than the face of the signal, which must be painted flat black, no other painting or maintenance is required. Full vertical and horizontal adjustments are provided and a built in sighting device aids the adjustment. Because the background is easily removable and light, it is possible for the doublet lens unit to be replaced by one man. The signal is available with from one to four units.

When ordering specify color required, starting at top. For example, a signal with green on top, yellow in middle and red on bottom should specify Green-Yellow-Red.

TYPE	NO. OF LENS UNITS	CATALOG NO.
AA5 Signal, with background	1	T3-001
" "	2	T3-002
" "	3	T3-003
" "	4	T3-004
AA5 Signal, w/o background	1	T3-005
" "	2	T3-006
" "	3	T3-007
" "	4	T3-008

PARTS FOR TRANSCO AA5 COLORLIGHT SIGNAL

DESCRIPTION	CATALOG NO.
Lifting Ring	T3-009
Vertical Adjustment Pivot Rod	T3-010
Set Screw for Vertical Adjustment	T3-011
Set Screw & Lock Nut for Horiz. Adjustment	T3-012
Lower Pole Mount Assembly, complete	T3-013
Signal Housing, 1 unit, less door & lenses	T3-014
Signal Housing, 2 unit, less door & lenses	T3-015
Signal Housing, 3 unit, less door & lenses	T3-016
Signal Housing, 4 unit, less door & lenses	T3-017
Door, 1 unit	T3-018
Door, 2 unit	T3-019
Door, 3 unit	T3-020
Door, 4 unit	T3-021
Background, 1 unit	T3-022
Background, 2 unit	T3-023
Background, 3 unit	T3-024
Background, 4 unit	T3-025
Set Hardware for Mounting Background	T3-026

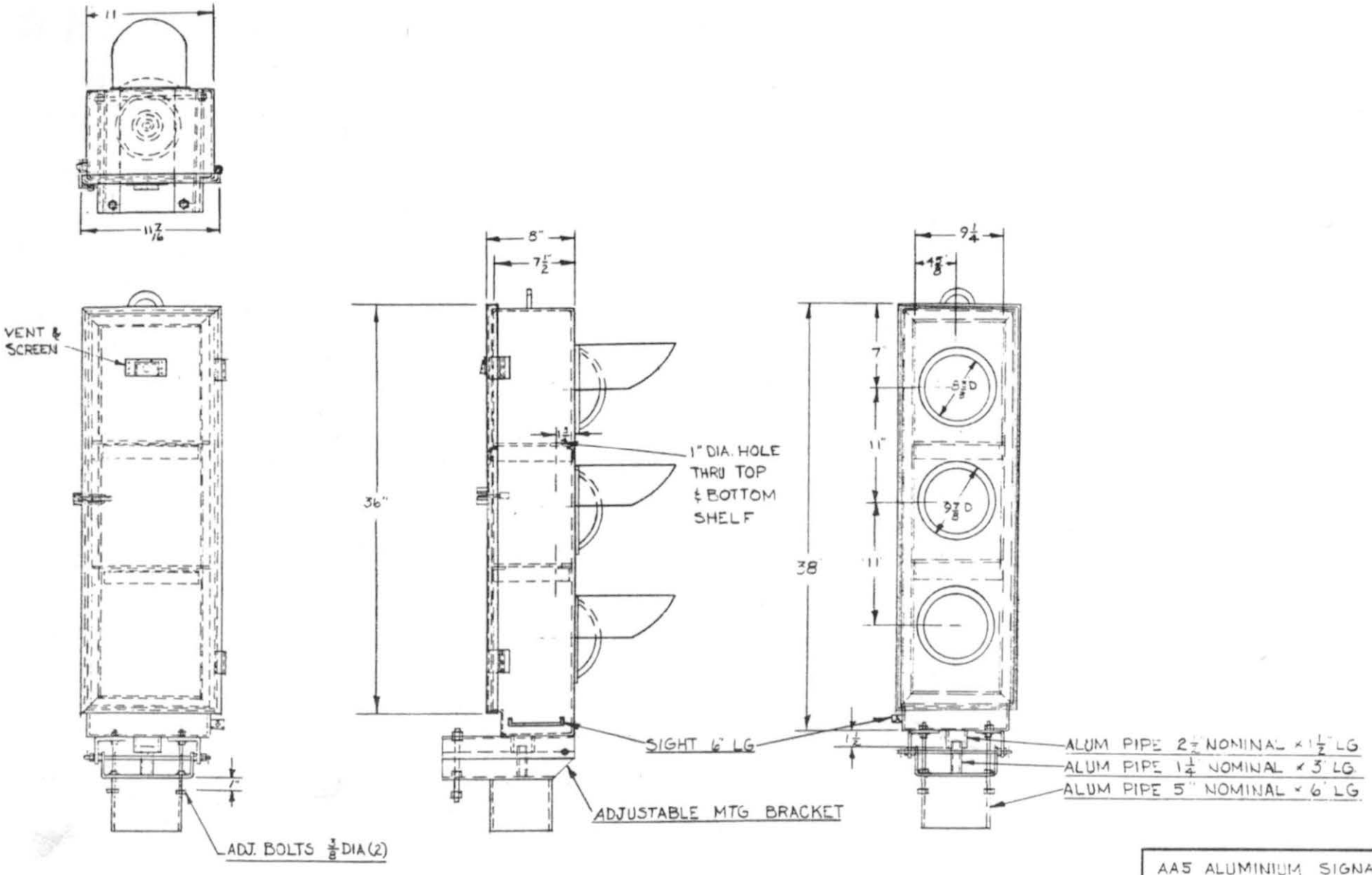

AA5 ALUMINIUM SIGNAL ASSEMBLY

TRANSCONTROL CORP. PORT WASHINGTON, N.Y.	DATE	DRAWING
	4-20-64	BA34

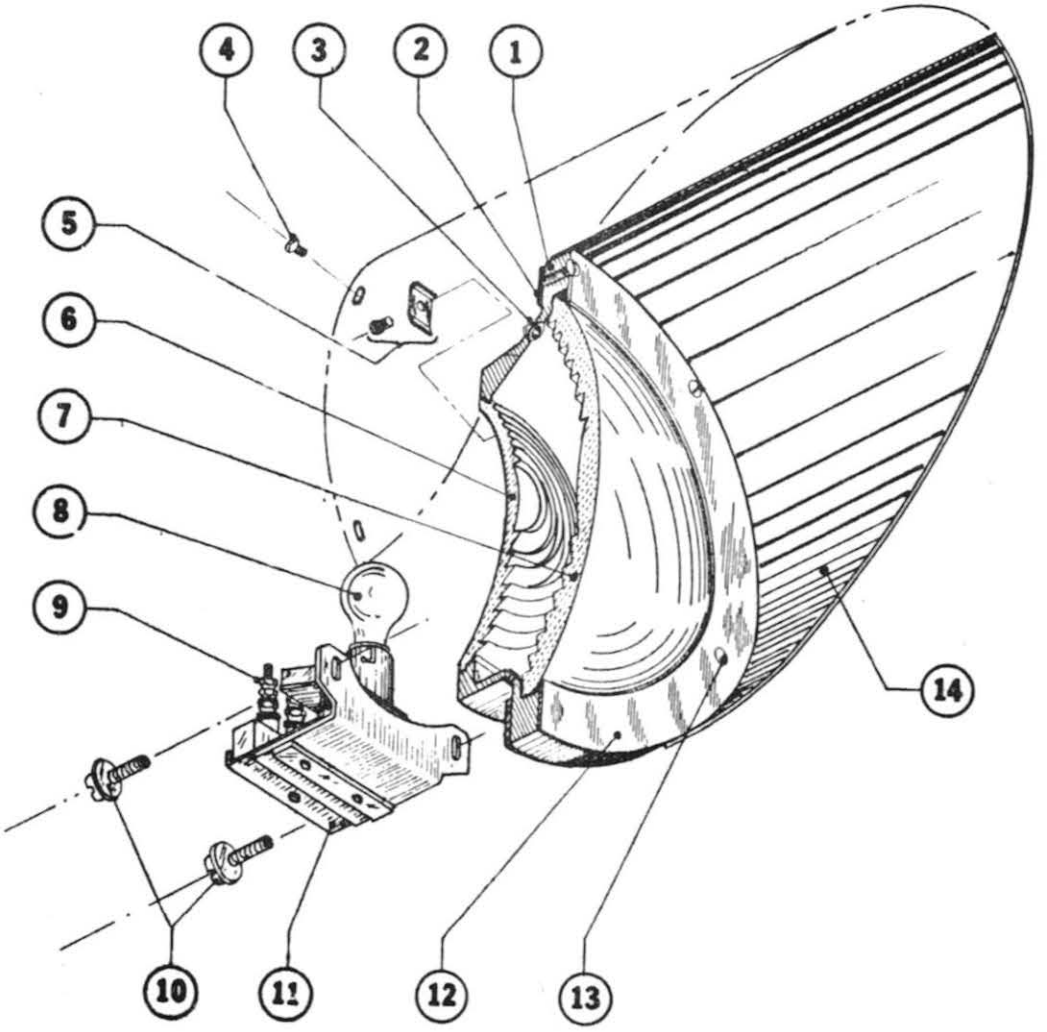

DOUBLET LENS TYPE
STYLE AA5 ALUMINUM COLOR LIGHT SIGNAL
(8 3/8" OUTER LENSES)

REF. NO.	DESCRIPTION
1	Cast Aluminum Lens Housing
2	Gasket
3	Lens Housing Vent
4	Hood Fastening Screw
5	Inside Lens Fastening Screw & Clip
6	Inner Lens
7	Outer Lens
8	Lamp Bulb Type S11 (Dual Filament Bulb)
9	AAR Terminal Block
10	Mounting Bracket
11	Light Socket & Mounting Bracket Assembly
12	Lens Ring
13	Lens Ring Fastening Screw
14	Lens Hood

TRANSCO DOUBLET SIGNAL LENS 8-3/8 INCH

REFERENCE Dwg. AA5 Sheet 2	DESCRIPTION	CATALOG NO.
	Doublet Lens Unit, complete, w/o bulb (Specify color of inner lens)	T3-100
2	Lens Housing	T3-101
3	Inside Lens, Red, 5-½" diameter	T3-102
	Inside Lens, Yellow, "	T3-103
	Inside Lens, Green, "	T3-104
	Inside Lens, Lunar White, "	T3-105
4	Outside Lens, Clear, 8-3/8" diameter	T3-106
	Outside Lens, Clear, 8-3/8" diameter with 40 degree deflecting bullseye	T3-107
5	Clip	T3-108
6	Machine Screw for Attaching Ref. 5 to Lens Housing	T3-109
7	Lens Ring	T3-110
8	Machine Screw for Attaching Ref. 7 to Lens Housing	T3-111
9	Machine Screw, to Plug Holes Used to Attach Deflecting Prism	T3-112
10	Hood	T3-113
11	Machine Screw for Attaching Hood to Lens Housing	T3-114
12	Bracket	T3-115

TRANSCO DOUBLET SIGNAL LENS 8-3/8 INCH

REFERENCE Dwg. AA5 Sheet 2	Description	CATALOG NO.
13	Lamp Socket for S11 Bulb	T3-116
14	Ventilator	T3-117
15	Lamp Bulb, S11, Bayonet Base 10v-18w	T3-118
16	Deflecting Prism Unit, complete, Clear, 20 degree deflection	T3-119
	Deflecting Prism Unit, complete, Clear, 30 degree deflection	T3-120
17	Housing for Deflecting Prism	T3-121
18	Machine Screw for Attaching Deflecting Prism Unit to Lens Housing	T3-122
	Nut for above screw	T3-123
19	Gasket	T3-124
20	Cover Lens, Clear, 20 degree deflection	T3-125
	Cover Lens, Clear 30 degree deflection	T3-126

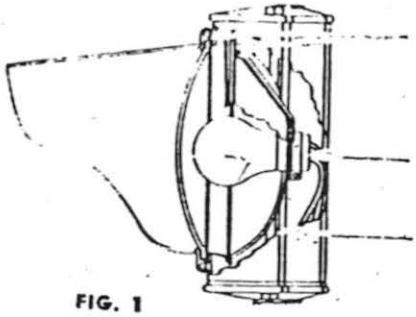

Multiple Gasketed Against the Elements. One piece rubber lens gasket cushions and seals lens inside and outside.

Socket with Lamp Grip and resistance-free welded leads.

Sturdy 5/16" Dia. Tie Rod Construction. All stresses placed against sturdy top & bottom castings simulating one piece construction.

FIG. 1

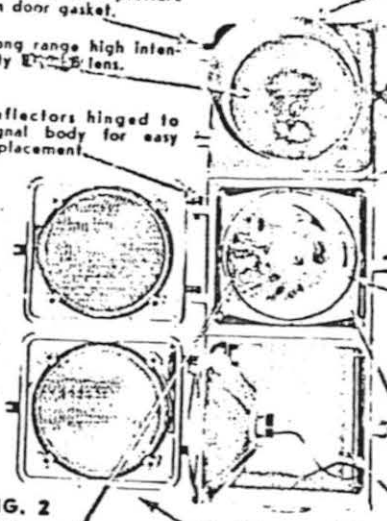

Hinges offset outwardly to insure even pressure on door gasket.

Long range high intensity [illegible] lens.

Reflectors hinged to signal body for easy replacement.

Serrated end castings for positive locked position.

Sturdy top and bottom casting identical. Offers strength to assembly where needed.

Strong thumb nut clamps door tightly against gasket.

Die cast aluminum construction provides complete interchangeability of sections. Perfect fit and overhang provide water-tight joint.

Full floating reflector holder rim engages gasket the full 360° around lens giving absolute dust tight construction. Reflector is held firmly in place, yet can be swung outwardly without loosening screws.

Reflector mounted on SELF ALIGNING sturdy frame.

Every component of the [illegible] Signal is conveniently located for servicing.

FIG. 2

Special super brilliant [illegible] reflector.

Resilient door gasket seals against raised lip on signal body.

Total weight of 3 section Assembly . . . only 23 pounds . . . Sufficiently light for easy installation . . . sufficiently strong for long hard usage.

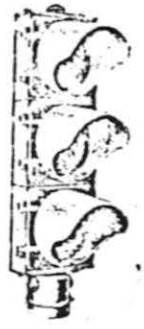

TYPE C SIGNAL

Catalog No. S13C

One Way — Three Section
4½" Slip Fitter Post Mounted
(Underground Feed)

Two Section Catalog No. S12C
Four Section Catalog No. S14C

KB141 1 SECTION

APPROXIMATE WEIGHT
7½ LBS.

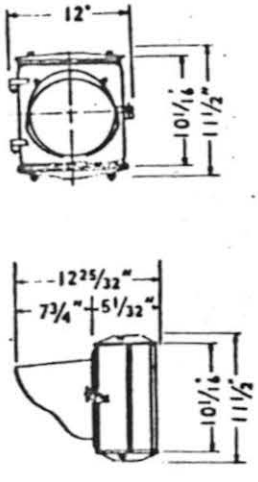

KB142 2 SECTION

APPROXIMATE WEIGHT
15 LBS.

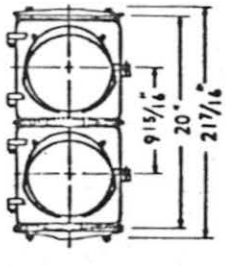

LENGTH BETWEEN M'T'G SURFACES = 21 7/16

KB143 3 SECTION

APPROXIMATE WEIGHT
23 LBS.

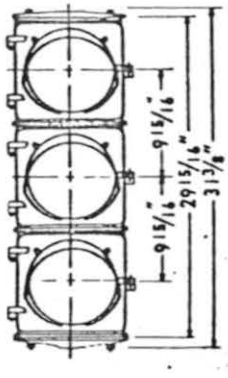

LENGTH BETWEEN M'T'G SURFACES = 31⅜

KB144 4 SECTION

APPROXIMATE WEIGHT
30 LBS.

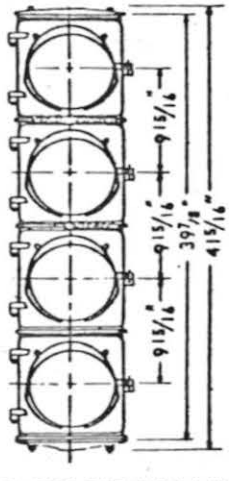

LENGTH BETWEEN M'T'G SURFACES = 41 5/16

Transcontrol Corporation

2 YENNICOCK AVENUE, PORT WASHINGTON, N. Y.
Phone: POrt Washington 7-4500 Cable TRANSCONTROL

DWG. AA-6, SH. 1
10-10-62

TRANSCO TYPE C COLORLIGHT SIGNAL

The TRANSCO Type C Aluminum Signal is a very light weight and low cost signal which has a simple four stud bolt arrangement on the base for mounting on a 3", 4" or 5" post. It can also be furnished for hanging on a horizontal cable between two posts on each side of the track. It can also be used as a dwarf signal for mounting on a short post in the ground without a foundation.

The Type C signal can be provided with or without a background. It can be provided with a standard 8 3/8" aluminum doublet lens system which uses S11 lamps or with a reflector type lens system using standard 110 volt screw base lamps.

The Type C signal is serviced from the front. The lens system, either doublet type or reflector type, is mounted in the door of each lens housing. Lens housings are all individual and can be assembled into two, three or four unit signals. If it is desired to control the doublet type signal from 110 volts, an individual small transformer can be provided in each lens housing having capacity for one S11 lamp.

DESCRIPTION	CATALOG NO.
Type C Reflector Lens Signal, 1 unit, for mounting on pipe post (specify 3", 4" or 5") Specify color lens: Green, Yellow, Red or Blue w/o background.	T3-200
Type C Signal, as above, 2 unit	T3-201
Type C Signal, as above, 3 unit	T3-202
Type C Signal, as above, 4 unit	T3-203
Type C Reflector Lens Signal, 1 unit, with background, for mounting on pipe post (Specify 3", 4" or 5) Specify color lens: Green, Yellow, Red or Blue	T3-207
Type C Signal, as above, 2 unit	T3-204
Type C Signal, as above, 3 unit	T3-205
Type C Signal, as above, 4 unit	T3-206

TRANSCO TYPE C COLORLIGHT SIGNAL

DESCRIPTION	CATALOG NO.
Type C Doublet Lens Signal, 1 unit, w/o background for mounting on pipe post (Specify 3", 4" or 5") Specify color lens: Green, Yellow, Red or Lunar White	T3-208
Type C Signal, as above, 2 unit	T3-209
Type C Signal, as above, 3 unit	T3-210
Type C Signal, as above, 4 unit	T3-211
Type C Doublet Lens Signal, 1 unit, with background for mounting on pipe post (Specify 3", 4" or 5") Specify color lens: Green, Yellow, Red or Lunar White	T3-212
Type C Signal, as above, 2 unit	T3-213
Type C Signal, as above, 3 unit	T3-214
Type C Signal, as above, 4 unit	T3-215
Transformer, for control of Type C Signal from 110 volts a.c. (One required for each unit)	T3-216

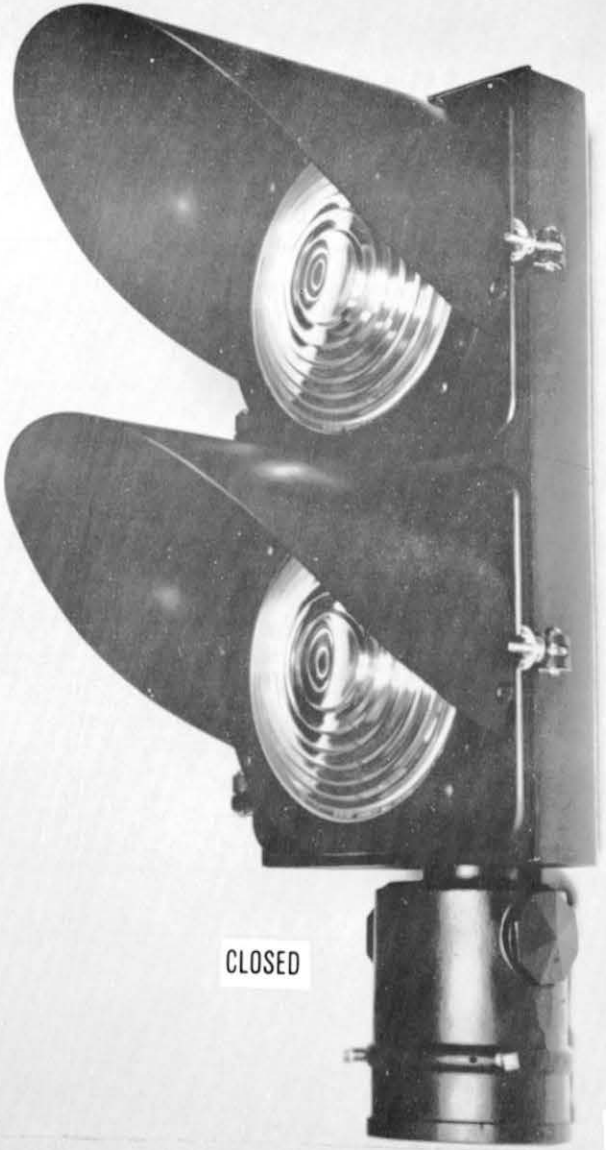

CLOSED

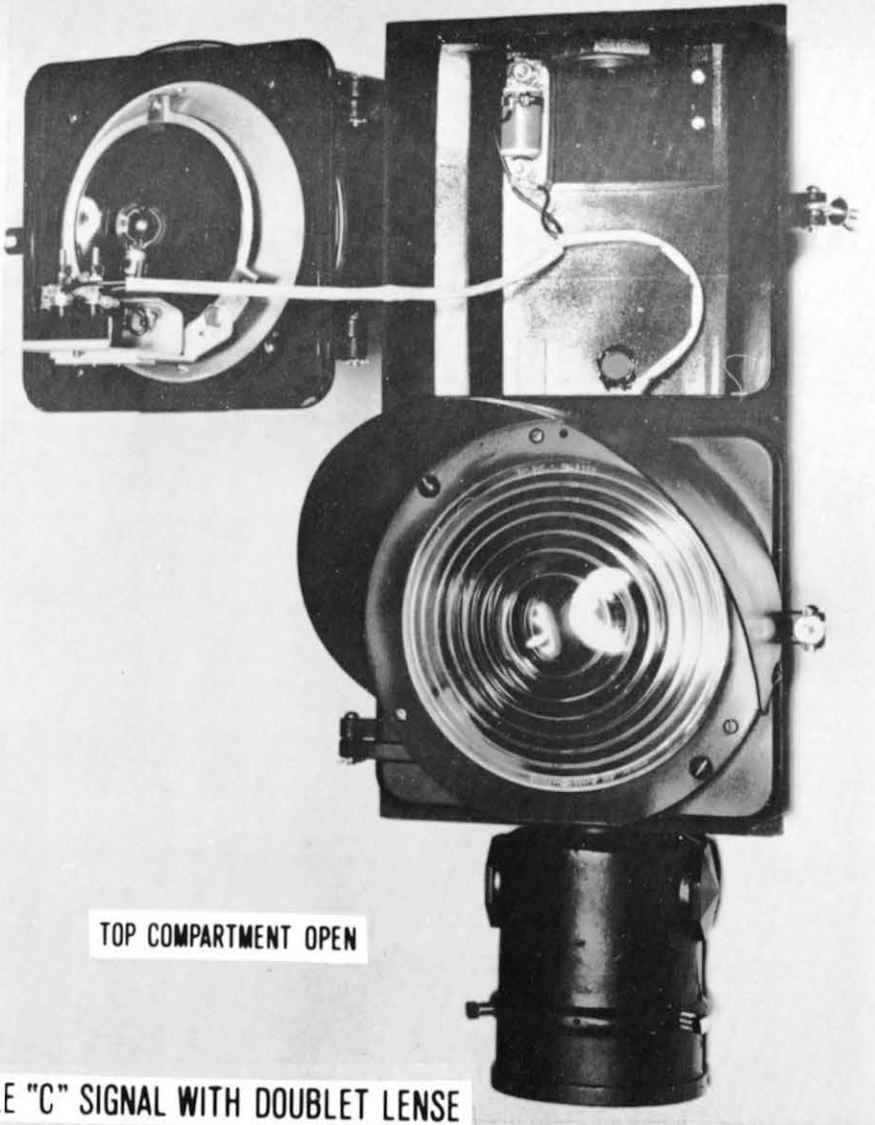

TOP COMPARTMENT OPEN

2 COLOR STYLE "C" SIGNAL WITH DOUBLET LENSE

TYPE C COLOR LIGHT SIGNAL WITH DOUBLET LENSE

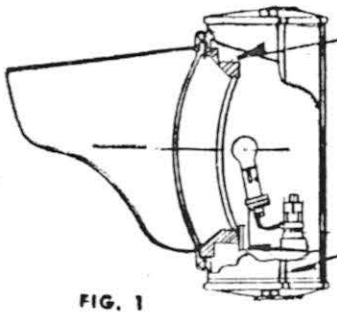

Multiple Gasketed Against the Elements. One piece rubber lens gasket cushions and seals lens inside and outside.

Sturdy 5/16" Dia. Tie Rod Construction. All stresses placed against sturdy top & bottom castings simulating one piece construction.

FIG. 1

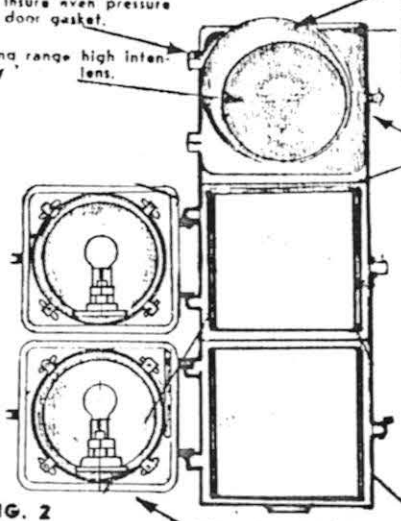

Hinges offset outwardly to insure even pressure on door gasket.

Long range high intensity lens.

Serrated end castings for positive locked position.

Sturdy top and bottom casting identical. Offers strength to assembly where needed.

Strong thumb nut clamps door tightly against gasket.

Die cast aluminum construction provides complete interchangeability of sections. Perfect fit and overhang provide water-tight joint.

Every component of the Signal is conveniently located for servicing.

Resilient door gasket seals against raised lip on signal body.

FIG. 2

Total weight of 3 section Assembly . . . only 23 pounds . . . Sufficiently light for easy installation . . . sufficiently strong for long hard usage.

TYPE C SIGNAL

One Way — Three Section
4½" Slip Fitter Post Mounted
(Underground Feed)

1 SECTION

APPROXIMATE WEIGHT
7½ LBS.

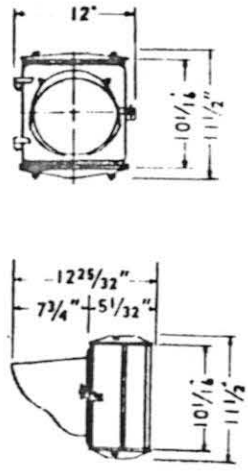

2 SECTION

APPROXIMATE WEIGHT
15 LBS.

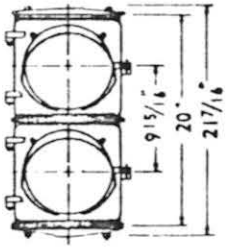

LENGTH BETWEEN M'T'G SURFACES = 21 7/16

3 SECTION

APPROXIMATE WEIGHT
23 LBS.

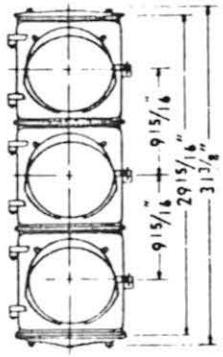

LENGTH BETWEEN M'T'G SURFACES = 31 3/8

4 SECTION

APPROXIMATE WEIGHT
30 LBS.

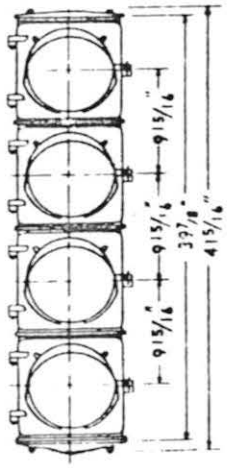

LENGTH BETWEEN M'T'G SURFACES = 41 5/16

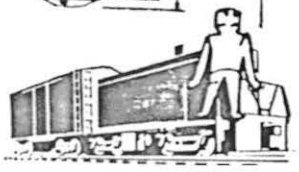

Transcontrol Corp.

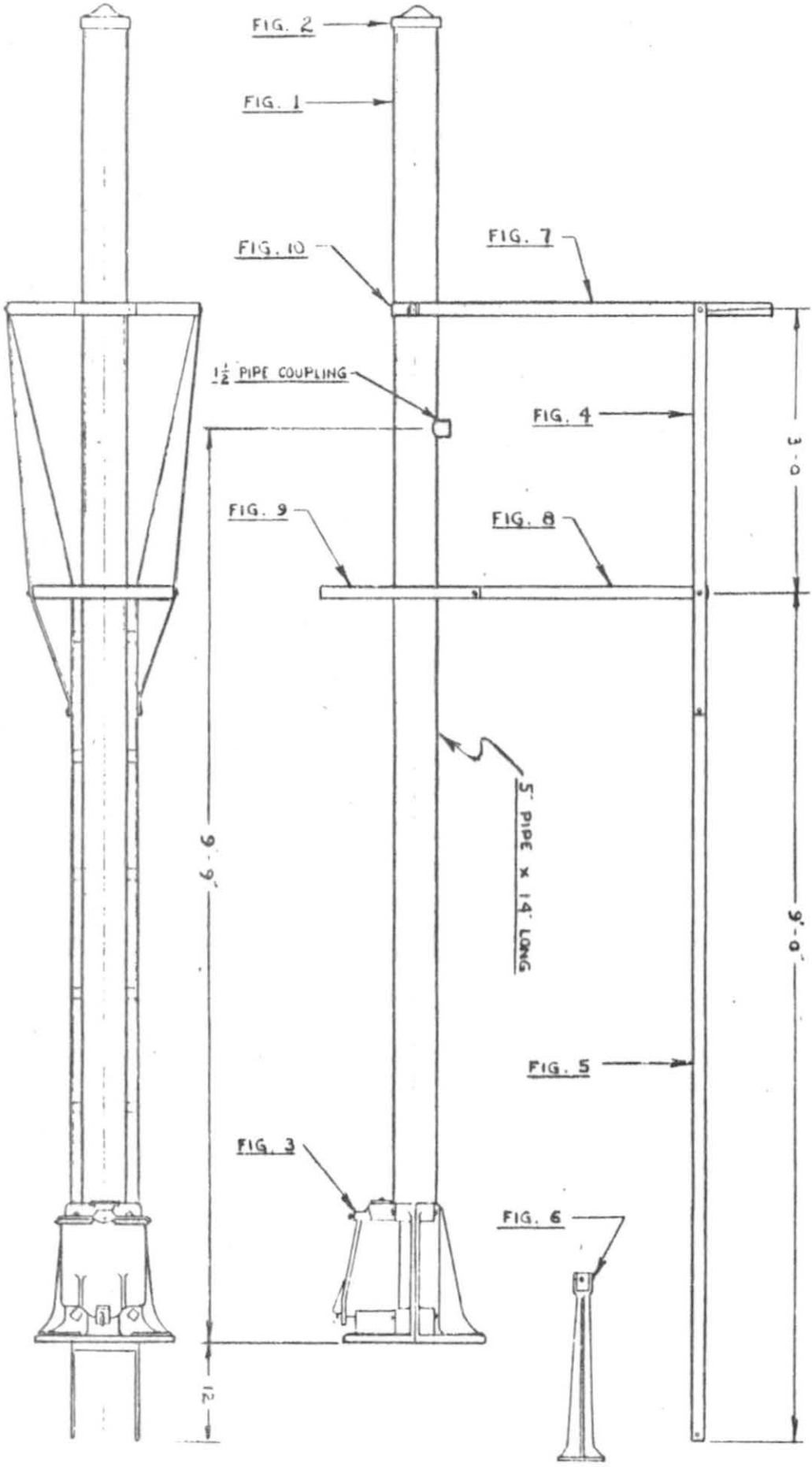

1 ARM GROUND SIGNAL MAST

GROUND SIGNAL MASTS			
TRANSCONTROL CORP. PORT WASHINGTON, N.Y.	DATE	DRAWING AA60	SH. NO 1

ONE ARM GROUND SIGNAL MAST

TRANSCONTROL CORP. PORT WASHINGTON, N.Y.	DATE 9/9/64	DRAWING AA60	SH. NO. 2

ONE ARM GROUND SIGNAL MAST

ORDER BY PLATE, FIGURE AND NAME

FIG.	NAME
A	One Arm Ground Signal Mast Complete as Shown.
B	Same as above except without front platform (Fig.9)
C	Pole only complete with Pinnacle and Jct. Box Base.
D	Ladder only complete with Handrail, Platform and Base.
E	Same as above except without front platform (Fig. 9)
1	Pipe
2	Pinnacle
3	Jct. Box Base
4	Ladder - Top Section
5	Ladder - Bottom Section
6	Ladder Base
7	Hand Rail
8	Platform - Rear Section
9	Platform - Front Section
10	Pole Clamp (2 required for hand rail and 2 for platform)

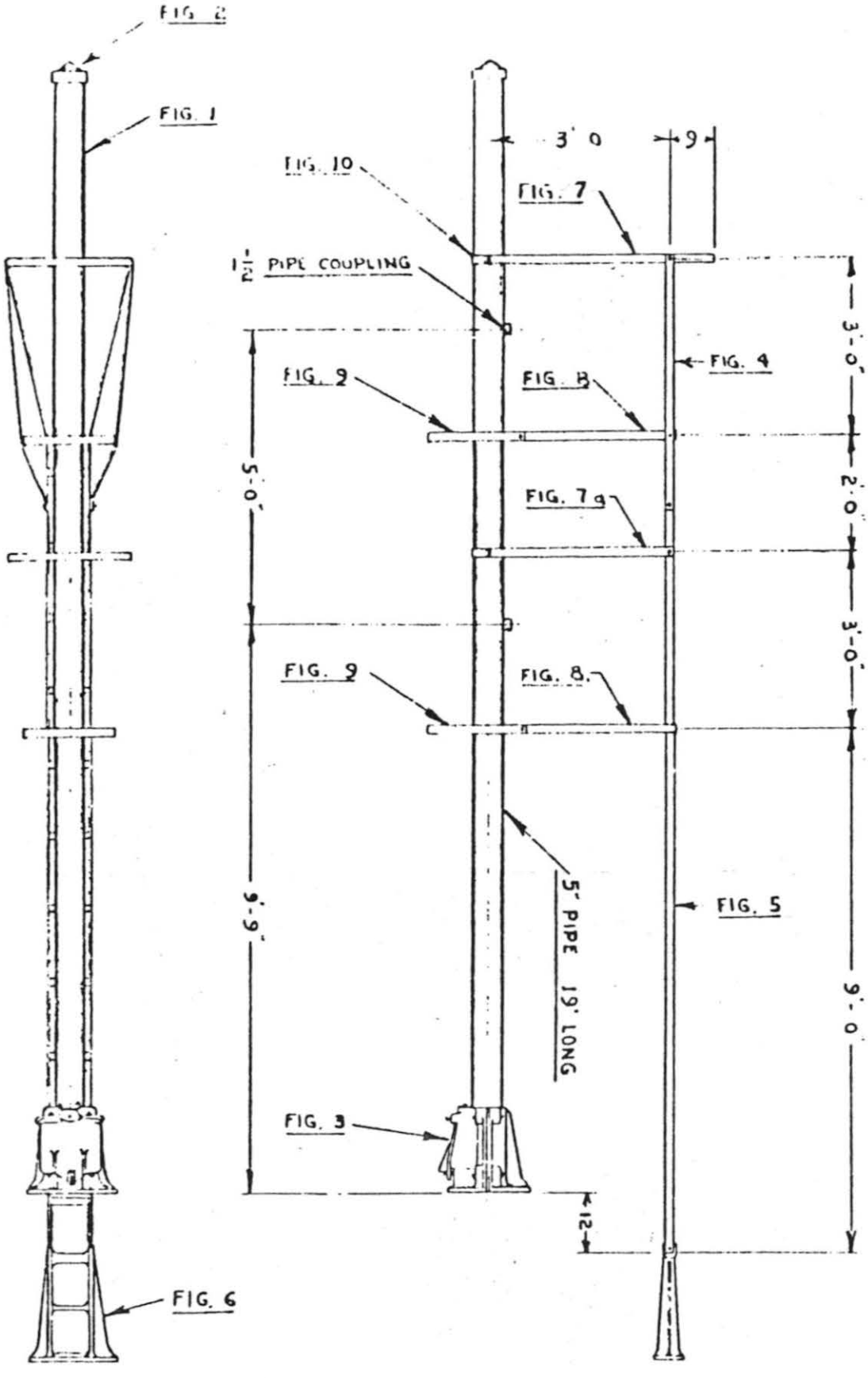

GROUND SIGNAL MASTS

TRANSCONTROL CORP. | DATE | DRAWING | SH.

2 ARM GROUND SIGNAL MAST
5'- 0" SPACING BETWEEN HEADS

TWO ARM GROUND SIGNAL MAST

WITH 5 Ft. SIGNAL SPACING

ORDER BY PLATE, FIGURE AND NAME

FIG.	NAME
A	Two Arm Ground Signal Mast Complete as Shown.
B	Same as above except without front platform (Fig.9)
C	Pole Only Complete with Pinnacle and Jct. Box Base.
D	Ladder Only Complete with Handrails, Platforms and Base.
E	Same as above except without front platforms (Fig.9)
1	Pipe
2	Pinnacle
3	Jct. Box Base
4	Ladder - Top Section
5	Ladder - Bottom Section
6	Ladder Base
7	Hand Rail - Top
7a	Hand Rail - Bottom
8	Platform - Rear Section - Top
8a	Platform - Rear Section - Bottom
9	Platform - Front Section
10	Pole Clamp (2 required for each hand railing and 2 for each platform)

TWO ARM GROUND SIGNAL MAST

TRANSCONTROL CORP.
PORT WASHINGTON, N.Y.

DATE	DRAWING	SH. NO.
9/9/64	AA 60	4

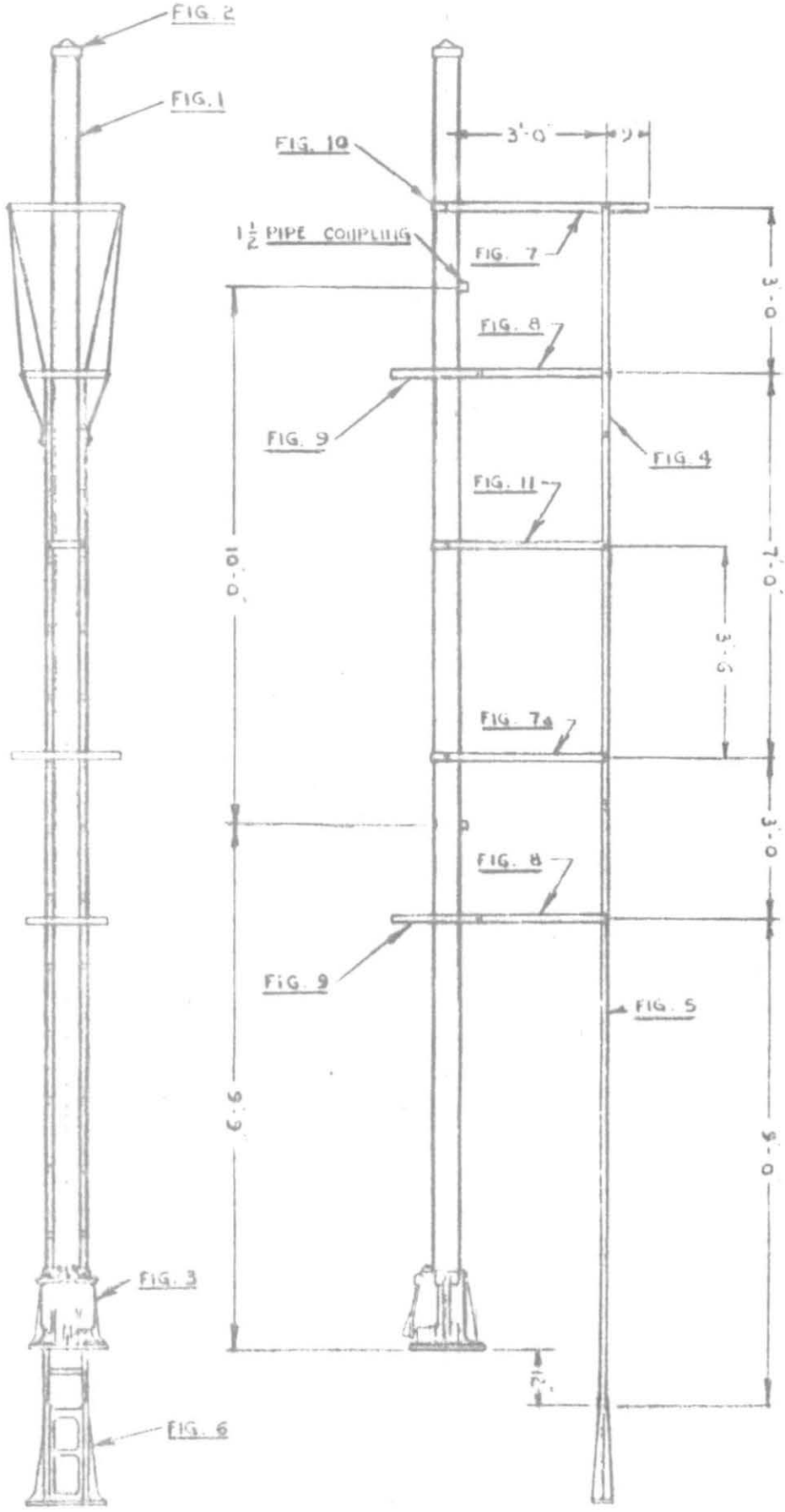

GROUND SIGNAL MASTS			
TRANSCONTROL CORP. PORT WASHINGTON, N.Y.	DATE	DRAWING AA 60	SH. NO. 5

2 ARM GROUND SIGNAL MAST
10' 0 SPACING BETWEEN HEADS

TWO ARM GROUND SIGNAL MAST

TRANSCONTROL CORP. PORT WASHINGTON, N.Y.	DATE 9/9/64	DRAWING AA 60	SH. NO 6

TWO ARM GROUND SIGNAL MAST

WITH 10 Ft. SIGNAL SPACING

ORDER BY PLATE, FIGURE AND NAME

FIG.	NAME
A	Two Arm Ground Signal Mast Complete as Shown.
B	Same as above except without front platform (Fig.9)
C	Pole Only Complete with Pinnacle and Jct. Box Base.
D	Ladder Only Complete with Handrails, Platforms, Brace and Base.
E	Same as above except without front platforms (Fig. 9)
1	Pipe
2	Pinnacle
3	Jct. Box Base
4	Ladder - Top Section
5	Ladder - Bottom Section
6	Ladder Base
7	Hand Rail - Top
7a	Hand Rail - Bottom
8	Platform - Rear Section - Top
8a	Platform - Rear Section - Bottom
9	Platform - Front Section
10	Pole Clamp (2 required for each hand rail, platform and ladder brace)
11	Ladder Brace

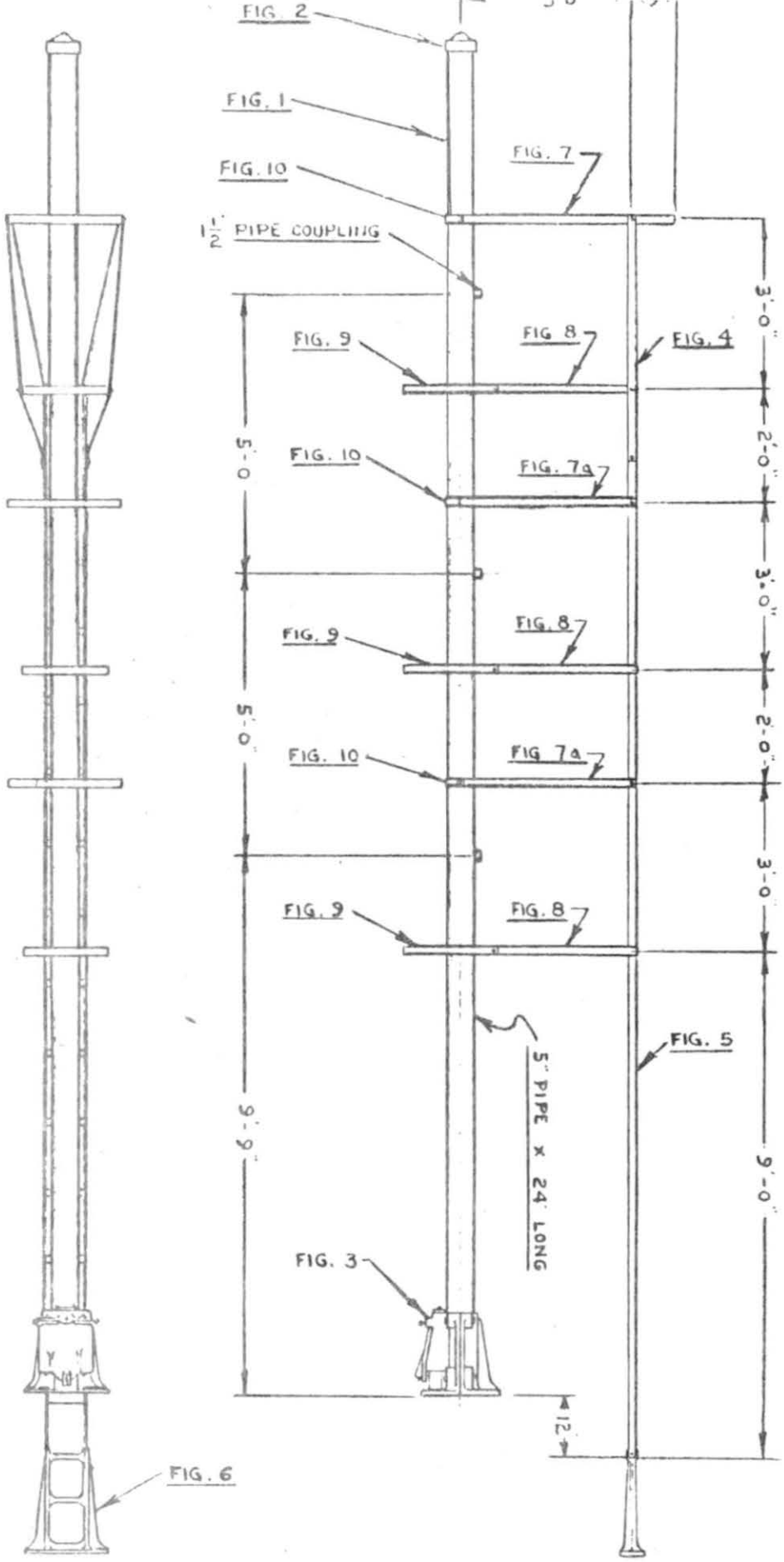

GROUND SIGNAL MASTS.			
TRANSCONTROL CORP. PORT WASHINGTON, N.Y.	DATE	DRAWING AA60	SH. No. 7

3 ARM GROUND SIGNAL MAST
5'-0" SPACING BETWEEN HEADS

THREE ARM GROUND SIGNAL MAST

ORDER BY PLATE, FIGURE AND NAME

FIG.	NAME
A	Three Arm Ground Signal Mast Complete as Shown.
B	Same as above except without front platform(Fig.9)
C	Pole Only Complete with Pinnacle and Jct. Box Base.
D	Ladder Only Complete with Handrails, Platforms and Base.
E	Same as above except without front platforms (Fig. 9)
1	Pipe
2	Pinnacle
3	Jct. Box Base
4	Ladder - Top Section
5	Ladder - Bottom Section
6	Ladder Base
7	Hand Rail - Top
7a	Hand Rail - Bottom
7b	Hand Rail - Center
8	Platform - Rear Section - Top
8a	Platform - Rear Section - Bottom
8b	Platform - Rear Section - Center
9	Platform - Front Section
10	Pole Clamp (2 required for each hand rail and 2 for each platform)

THREE ARM GROUND SIGNAL MAST

TRANSCONTROL CORP.
PORT WASHINGTON, N.Y.

DATE	DRAWING	SH. NO.
9/9/64	AA 60	8

SWITCHES

TRANSCO

STYLE PW1 YARD SWITCH MACHINE

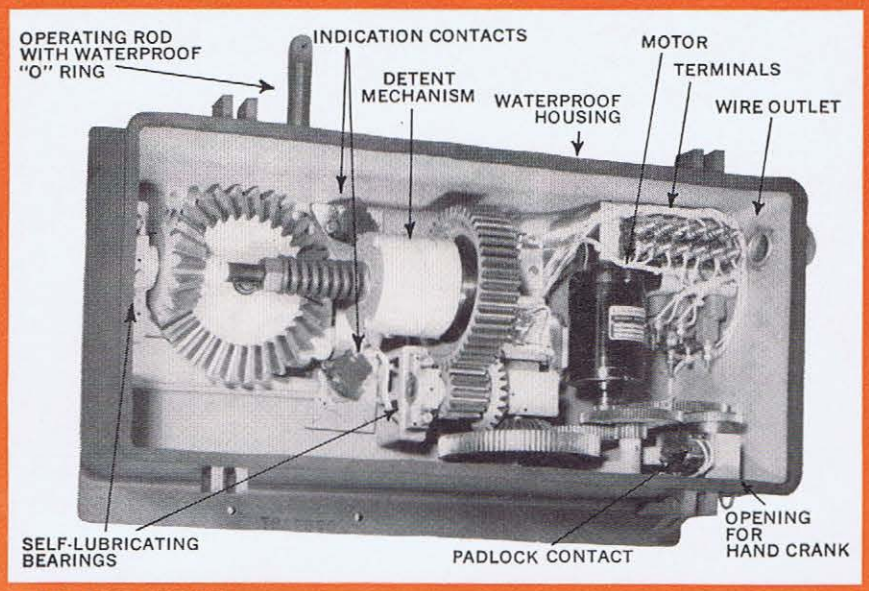

TOP COVER REMOVED

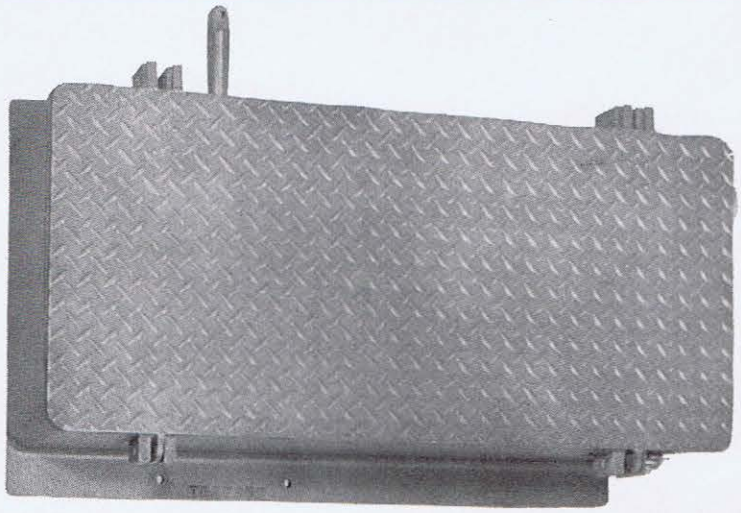

COVER IN PLACE

SALIENT FEATURES

- Trailable, produces up to 1,500# thrust
- Detents when switch is obstructed, resets on next operation
- Does not require overload relay
- Operates from 110 volts either AC or DC
- Operating time, 3.0 secs.
- Normal current load approximately 5.0 amps.
- Can be controlled over 1,000′ using 3 #14 wires
- Will operate with track flooded to top of rail
- Low cost

Transcontrol Corp.

Tel. 516-883-6900 • No. 2 YENNICOCK AVE., PORT WASHINGTON, N.Y.

Reprinted from RAILWAY SIGNALING & COMMUNICATIONS February 1967

TRANSCO PW1 YARD SWITCH MACHINE

The TRANSCO PW1 Yard Switch Machine has been designed to operate switches, derails, bridge locks, etc., where mechanical locking is not required. It is a high speed movement, operating a six inch stroke in three seconds. A detent mechanism serves as a clutch and also as an overload, so no overload relay is necessary. The detent mechanism also operates to make the machine trailable.

Operated from 110 volts A.C. or D.C., the PW1 will provide over 1500 lbs. thrust. Normal current is approximately 5.0 amps. It can be controlled by three #14 wires up to a distance of 1000 ft.

The machine may be easily hand cranked. Opening the cover to the hand crank hole operates a switch to open the motor circuit. It is suggested the PW1 Yard Switch Machine be controlled by a TRANSCO Style W1 Switch Operating Unit.

The detent mechanism can be set to detent at a pressure from 300 to 1500 lb. thrust. When installed, the switch machine should be checked for operation with the operating rod disconnected from the switch points. When proper stroke and indication contact closures are noted, the operating rod may be connected. Then, using the hand crank, operate switch mechanism. Adjust basket at each end of stroke so that switch points are just touching flush against stock rail when click is heard from control limit switch or movement of limit switch is noted. Now operate switch by power. If mechanism detents at end of either stroke, loosen corresponding basket pressure. Then test point to stock rail pressure with a bar to assure that points are up firm, but that some spring is possible with increased pry pressure. Check detent mechanism and reset in each direction by operating switch with obstruction in points. Detent should reset when mechanism is operated in opposite direction. Indication contacts should not close if switch point is not close to stock rail.

Maintenance is very simple for the PW1 Yard Switch Machine. The gears should be brushed with heavy oil occasionally. Motor brushes should be inspected and replaced, if necessary. General cleanliness in the machine will increase gear and bearing life. Point pressures should be checked as outlined in the preceding paragraph. Also check detent and indication contact operation.

RELAYS

Transcontrol...

Your Source for High Quality Signal Relays

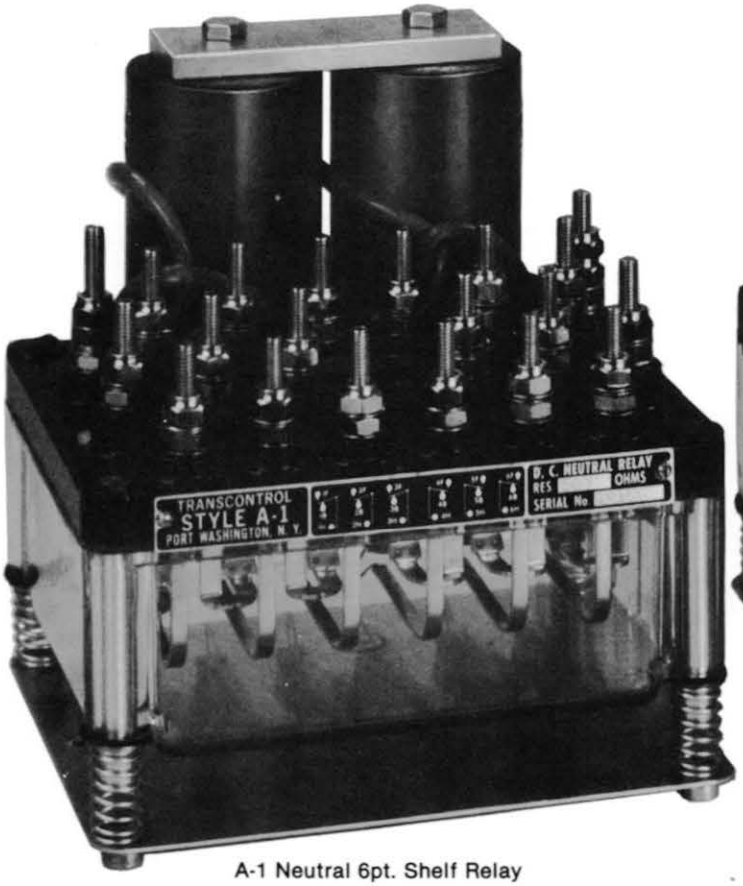

A-1 Neutral 6pt. Shelf Relay

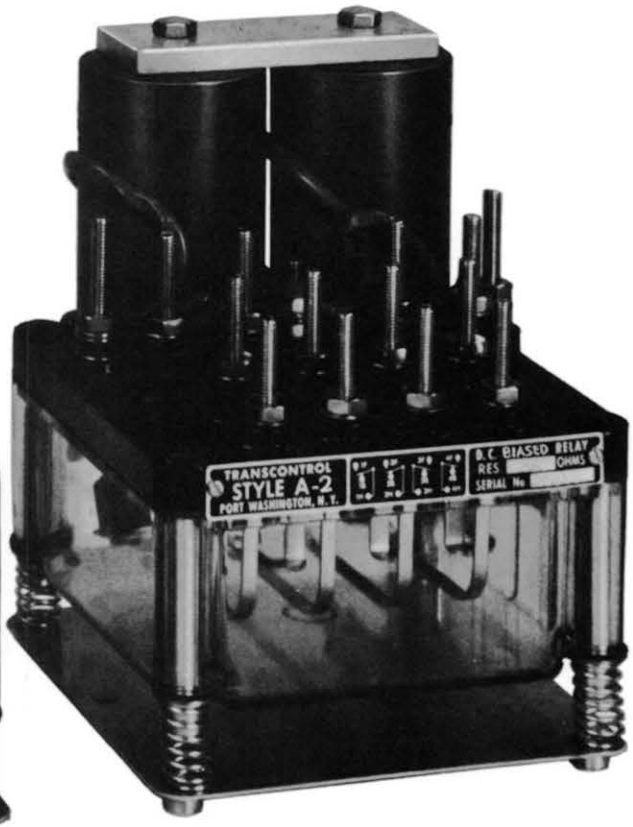

A-2 Biased 4pt. Shelf Relay

(Shock absorbing mounting available for all types.)

Transcontrol offers a full range of neutral (A-1) and biased (A-2) shelf relays in either four-point or six-point configuration. Typical applications include ordinary acting, slow release, slow pickup, slow pickup/release, light out, power transfer, special slow release for crossing gate control, as well as DC-track relays. Relays are available with a range of coil resistances to allow for efficient operation in various applications from track to line.

Transcontrol Corporation, A Siemens Company,
75 Marcus Drive, Melville, New York 11747
(516) 249-6000 TX 645117

Transcontrol A Siemens Company

CC/4800-001-121

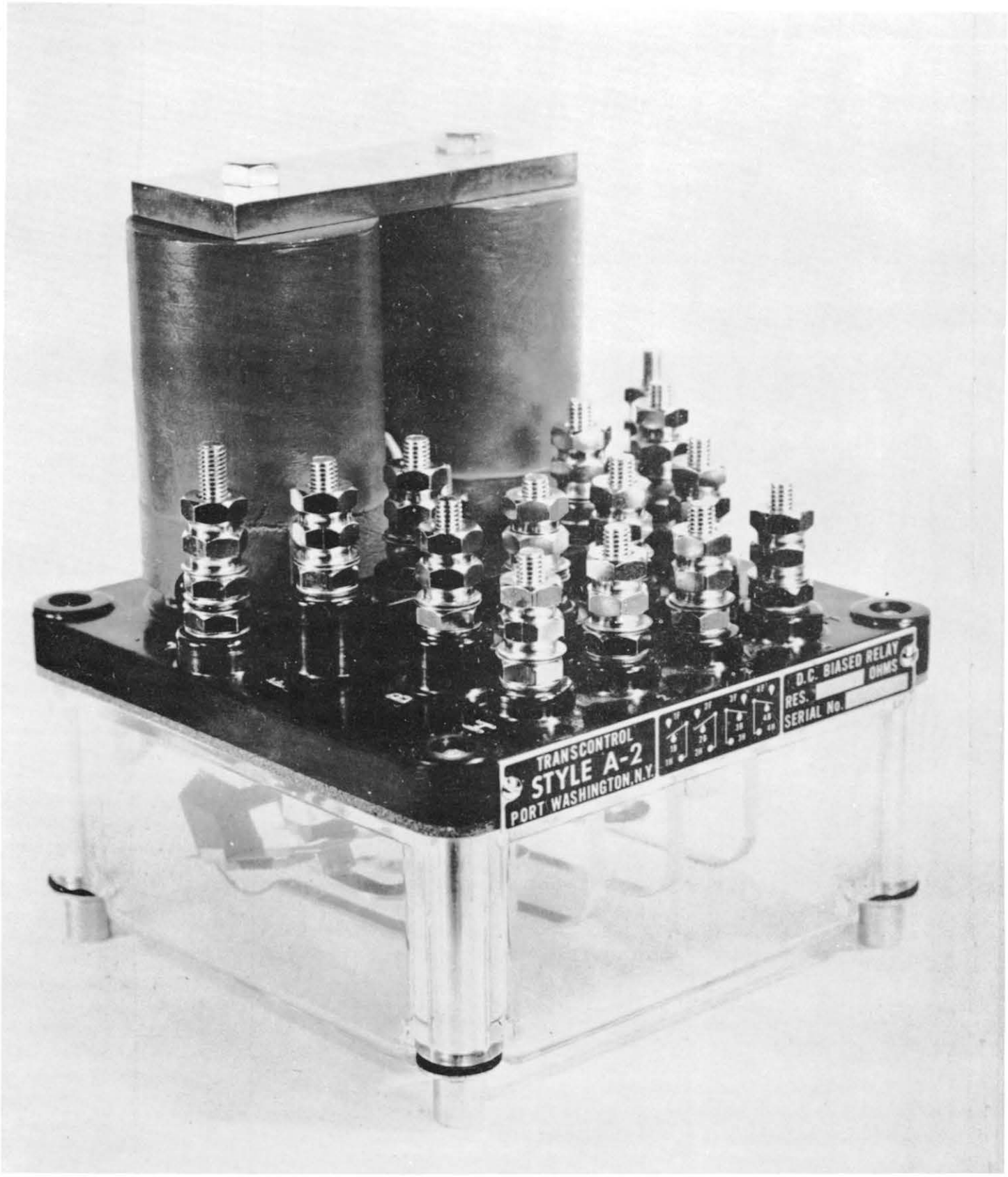

STYLE A2, 4 POINT RELAY
WITH AAR TERMINALS

A1 and A2 Shelf Type Relays

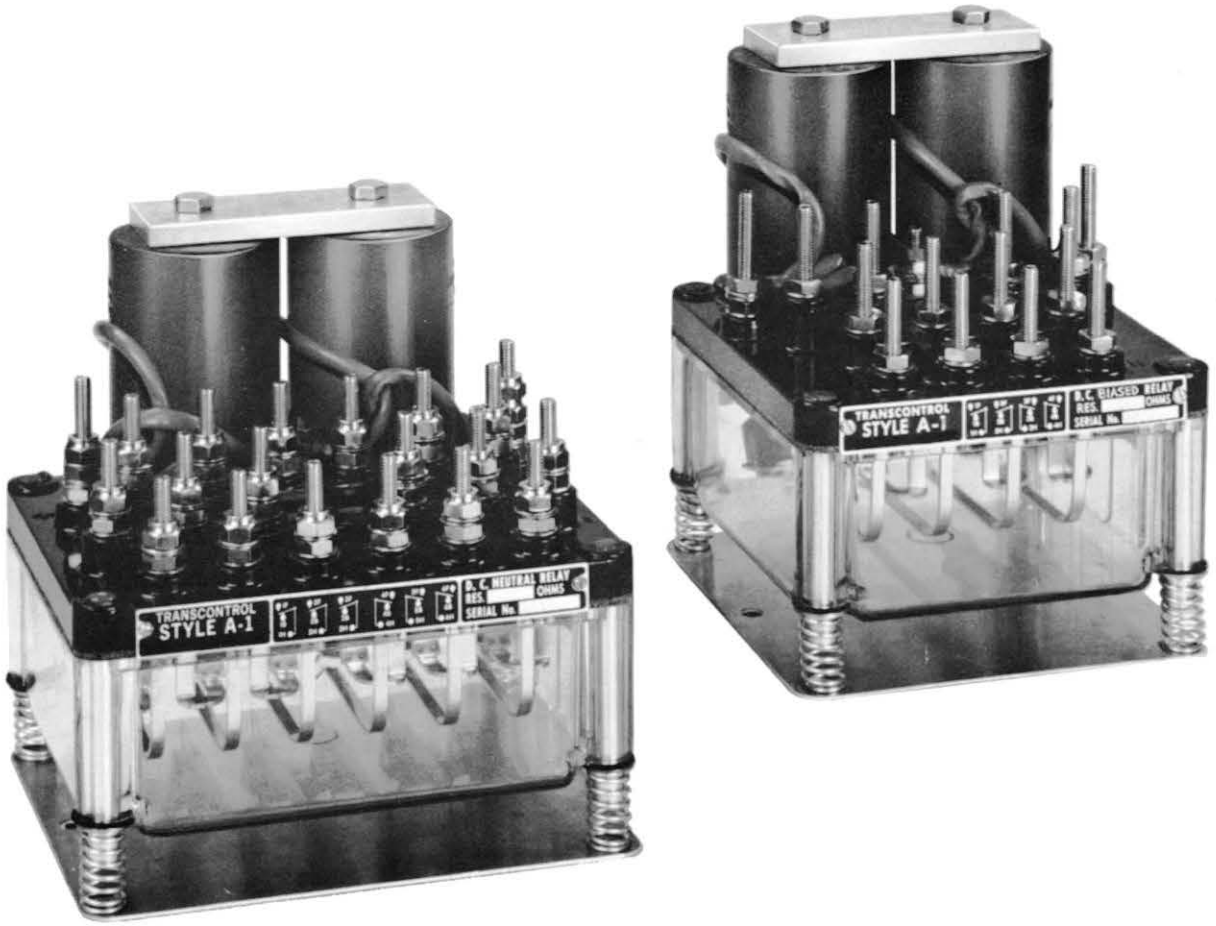

Transcontrol A Siemens Company

A1 and A2 Shelf Type Relays

General Information

Transcontrol manufactures a full line of four and six point vital neutral (style A1) and biased (Style A2) shelf type relays developed specifically for the requirements of vital circuits in railroad and transit signal systems. Transcontrol A1 and A2 relays are manufactured to conform or exceed AAR requirements, and are factory calibrated under stringent quality control to provide a consistent high quality product.

Transcontrol A1 and A2 shelf type relays offer the following features:

- wide selection of coil resistance and contact arrangements
- standard AAR terminals for coils and contact termination
- shock absorber platform
- contact mechanism protected by transparent dust cover for easy visual inspection
- factory calibrated and tested
- shelf and wall mounting
- plug-in terminals option available

Non-aging materials are used for the structure of the magnetic circuits. The coils and contacts can be replaced easily without disturbing the air gap of the magentic circuit. Slow pick-up and slow release A1 and A2 relays are available.

The nameplate of each relay contains a contact diagram and other operating information.

Contacts

Contact fingers and springs are manufactured of plated spring tempered phosphore bronze. Individual contacts are removable and can be easily replaced. The armature movement operates the heel spring and assures proper contact wiping for self cleaning. The contact material for low voltage front contacts is silver carbon. The low voltage heel and back contact are made from fine silver.

Cover

The armature and contact assembly of the relay is protected against moisture, dust, and mechanical damage with a transparent, non-yellowing dust cover. Gaskets are used to assure tightness.

Relay Voltage

Transcontrol relays are manufactured for various input or control voltages. For further details consult the relay tabulation.

Termination

For the coils and contacts standard AAR terminals are provided. Upon request, plug-in terminals are available. (See below.)

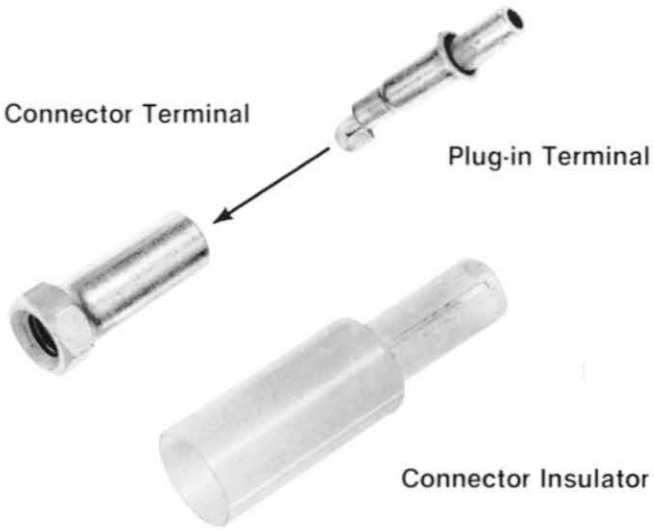

Scale: 1:1

Sectional Cut of a Plug-in Terminal

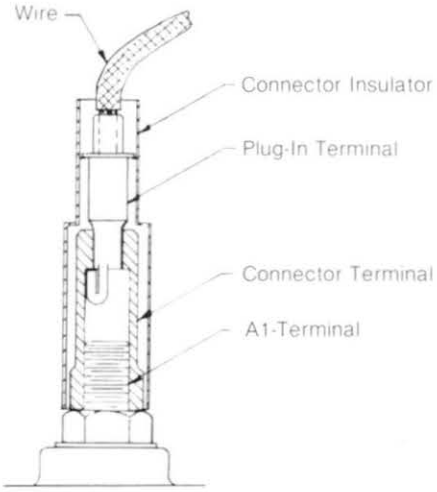

Scale: 1:1

Mounting

Transcontrol A1 and A2 relays are supplied with a base plate and spring shock absorbers for shelf mounting. For wall mounting two additional brackets must be used which have to be ordered separately.

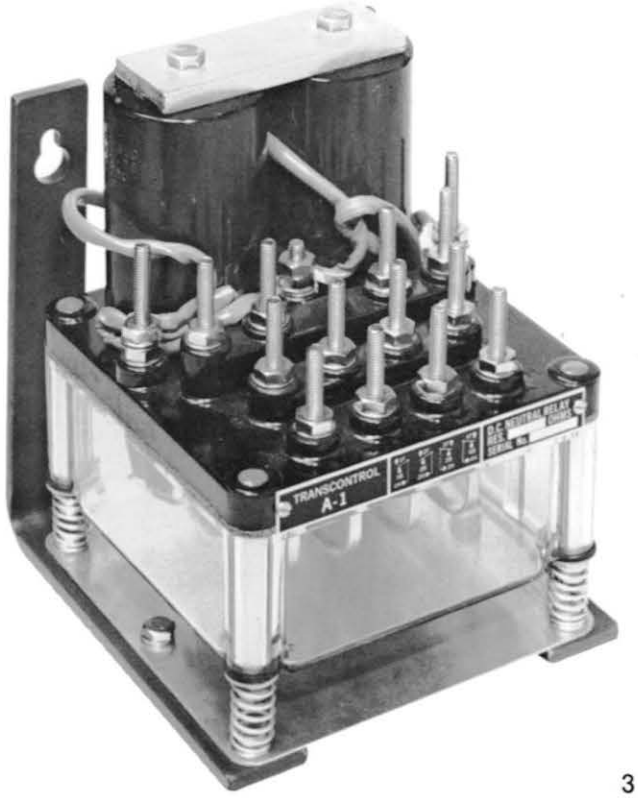

A1 Shelf-Type Relay with Wall Mounting Brackets and base plate with spring shock absorbers.

Order Information*

	Part No.
Wall Mounting Bracket	27255633
Plug-in Terminal	27215028
Connector Terminal	00405092
Connector Insulator	27255818

*For A1 and A2 Relays, see separate Specifications and Ordering Information.

Issued by Transcontrol Corporation, A Siemens Company
75 Marcus Drive, Melville, New York 11747 (516) 249-6000 TX 645117

CC/4800-014-121
ROV 1M 5/82 Printed in U.S.A.

A1 and A2 Relays

Specifications and Ordering Information

Transcontrol A Siemens Company

A1 and A2 Relays Available Types

A1 Ordinary-Acting Neutral DC Line Relay
A1 Ordinary-Acting Neutral DC Track Relay
A1L Light-Out Relay
A1 Magnetic Blow-Out Relay
A1P Power Transfer Relay
A1 Slow-Release Neutral DC Line Relay
A1X Special Slow-Release Neutral DC Gate-Control Relay

A2 Ordinary-Acting Biased DC Line Relay
A2 Ordinary-Acting Biased DC Track Relay
A2 Magnetic Blow-Out Relay
A2 Slow-Release Biased DC Line Relay

A1 Ordinary-Acting Neutral DC Line Relay

Part #	Contacts LV	Contacts HD	Coil Resistance ohm	Maximum Pick-up and Working Current [A]	Remarks
97255644	4	—	100	2.31	two 200 ohm coils connected in parallel
97255776	4	—	250	3.57	two 125 ohm coils connected in series
97255787	2	2	250	3.57	two 125 ohm coils connected in series
97255798	—	4	250	3.57	two 125 ohm coils connected in series
97255831	6	—	250	4.84	two 125 ohm coils connected in series
97255842	4	2	250	4.84	two 125 ohm coils connected in series
97255853	—	6	250	4.84	two 125 ohm coils connected in series
97255105	4	—	500	0.009	two 250 ohm coils connected in series
97255996	2	2	500	0.009	two 250 ohm coils connected in series
97255072	—	4	500	0.009	two 250 ohm coils connected in series
97255039	6	—	500	0.012	two 250 ohm coils connected in series
97255270	4	2	500	0.012	two 250 ohm coils connected in series
97255050	—	6	500	0.012	two 250 ohm coils connected in series
97260820	4	—	670	0.0064	two 335 ohm coils connected in series
97255138	4	—	1000	0.006	two 500 ohm coils connected in series
97255314	2	2	1000	0.006	two 500 ohm coils connected in series
97255116	—	4	1000	0.006	two 500 ohm coils connected in series
97255347	6	—	1000	0.007	two 500 ohm coils connected in series
97260358	4	2	1000	0.007	two 500 ohm coils connected in series
97260369	—	6	1000	0.007	two 500 ohm coils connected in series

Part #	Contacts LV	Contacts HD	Coil Resistance ohm	Maximum Pick-up and Working Current [A]	Remarks
A1 Ordinary-Acting Neutral DC Track Relay					
97255303	4	—	0.5	0.24	two 1 ohm coils connected in parallel
97255314	2	2	0.5	0.24	two 1 ohm coils connected in parallel
97255061	—	4	0.5	0.24	two 1 ohm coils connected in parallel
97255325	6	—	0.5	0.296	two 1 ohm coils connected in parallel
97255336	4	2	0.5	0.296	two 1 ohm coils connected in parallel
97255347	—	6	0.5	0.296	two 1 ohm coils connected in parallel
97255094	4	—	2	0.121	two 1 ohm coils connected in series
97255024	2	2	2	0.121	two 1 ohm coils connected in series
97255435	—	4	2	0.121	two 1 ohm coils connected in series
97255446	6	—	2	0.147	two 1 ohm coils connected in series
97255457	4	2	2	0.147	two 1 ohm coils connected in series
97255468	—	6	2	0.147	two 1 ohm coils connected in series
97255083	4	—	4	0.07	two 2 ohm coils connected in series
97255479	2	2	4	0.07	two 2 ohm coils connected in series
97255171	—	4	4	0.07	two 2 ohm coils connected in series
97255215	6	—	4	0.107	two 2 ohm coils connected in series
97255490	4	2	4	0.107	two 2 ohm coils connected in series
97255501	—	6	4	0.107	two 2 ohm coils connected in series
A1L Light-Out Relay					
97255292	4	—	0.08	1.515	two 0.15 ohm coils connected in parallel
A1 Magnetic Blow-Out Relay					
97260765	—	4	1000	0.0066	two 500 ohm coils connected in series
97260798	—	4	500	0.0132	two 250 ohm coils connected in series
97260776	—	6	500	0.01188	two 250 ohm coils connected in series
97260809	—	6	1000	0.00594	two 500 ohm coils connected in series
A1P Power-Transfer Relay					
97255017	—	4	200/200	0.45	10 V
97260160	—	6	200/200	0.45	10 V
A1 Slow-Release Neutral DC Line Relay					
97260006	4	—	250	0.019	1 second at 0.048 A
97260017	2	2	250	0.019	1 second at 0.048 A
97260028	—	4	250	0.019	1 second at 0.048 A
97260039	6	—	250	0.023	1 second at 0.048 A
97260831	4	—	400	0.0188	1 second at 0.0188 A
A1 Ordinary-Acting Neutral DC Track Relay					
97260050	4	2	250	0.023	1 second at 0.048 A
97260061	—	6	250	0.023	1 second at 0.048 A
97255160	4	—	500	0.012	1 second at 0.02 A
97260072	2	2	500	0.0147	1 second at 0.02 A
97260083	—	4	500	0.0147	1 second at 0.02 A
97255149	6	—	500	0.0143	1 second at 0.02 A
97260094	4	2	500	0.0143	1 second at 0.02 A
97260105	—	6	500	0.0143	1 second at 0.02 A
A1X Special Slow-Release Neutral DC Gate Control Relay					
97255028	4	—	200	0.027	3.0 seconds at 0.05 A
07255127	—	4	200	0.027	3.0 seconds at 0.05 A

A2 Ordinary-Acting Biased DC Line Relay

Part #	Contacts LV	Contacts HD	Coil Resistance ohm	Maximum Pick-up and Working Current [A]	Remarks
97260380*	4	—	250	0.013	two 125 ohm coils connected in series
97260391	2	2	250	0.013	two 125 ohm coils connected in series
97260402	—	4	250	0.013	two 125 ohm coils connected in series
97260413	4	—	400	0.011	two 200 ohm coils connected in series
97260424	2	2	400	0.011	two 200 ohm coils connected in series
97260435	—	4	400	0.011	two 200 ohm coils connected in series
97255193	4	—	1000	0.006	two 500 ohm coils connected in series
97260446	2	2	1000	0.006	two 500 ohm coils connected in series
97260457	—	4	1000	0.006	two 500 ohm coils connected in series
97260468	6	—	1000	0.0077	two 500 ohm coils connected in series
97260479	2	4	1000	0.0077	two 500 ohm coils connected in series
97260490	—	6	1000	0.0077	two 500 ohm coils connected in series
97260787	4	—	125/125	0.03097	two independent coils

A2 Ordinary-Acting Biased DC Track Relay

97260171	4	—	0.5	0.23	two 1 ohm coils connected in parallel
97260182	2	2	0.5	0.23	two 1 ohm coils connected in parallel
97260193	—	4	0.5	0.23	two 1 ohm coils connected in parallel
97260204	4	—	2	0.154	two 1 ohm coils connected in series
97260215	2	2	2	0.154	two 1 ohm coils connected in series
97260226	—	4	2	0.154	two 1 ohm coils connected in series
97260237	6	—	2	0.186	two 1 ohm coils connected in series
97260248	2	4	2	0.186	two 1 ohm coils connected in series
97260259	—	6	2	0.186	two 1 ohm coils connected in series

A2 Magnetic Blow-Out Relay

97255248	—	4	1000	0.0074	two 500 ohm coils connected in series

A2 Slow-Release Biased DC Line Relay

97260567	6	—	250	0.023
97260578	4	2	250	0.023
97260589	—	6	250	0.023
97260600	—	6	250	0.013
97260611	2	2	500	0.013
97260622	—	4	500	0.013

Issued by Transcontrol Corporation, A Siemens Company
75 Marcus Drive, Melville, New York 11747 (516) 249-6000 TX 645117

TRANSCO SIGNAL RELAYS

MODERN — LOW COST

STYLE A1 NEUTRAL — STYLE A2 BIASED

PLASTIC
ENCAPSULATED COILS
COLOR CODED FOR EASE
OF IDENTIFICATION

4 POINT A2
BIASED RELAY
WITH STANDARD
AAR POSTS

6 POINT NEUTRAL
LINE RELAY WITH
HUBBELL QUICK
DISCONNECT
TERMINALS

BLUE
A2—BIASED
RELAY

RED
A1—NEUTRAL
LINE RELAY

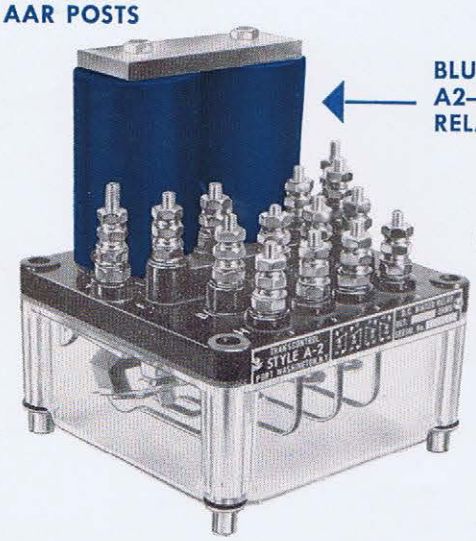

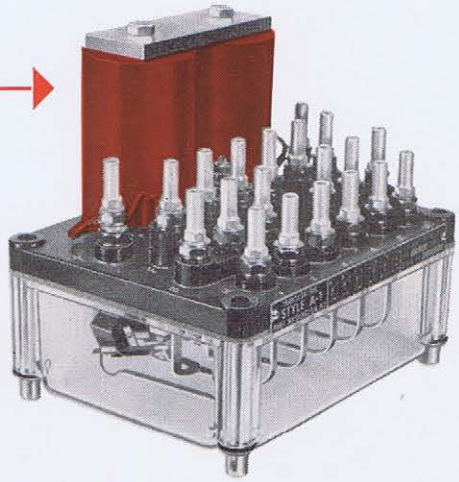

(A1–TRACK RELAY–TAN)
TRANSPARENT
PLASTIC
CASE

SALIENT FEATURES

1. Meet all AAR requirements.
2. Silicon Iron Non-Aging Magnetic Circuit.
3. Silver to Silver Impregnated Carbon Contacts.
4. Available as ordinary slow release, or Biased.
5. Available with Standard 4 amp. Contacts or Heavy Duty Contacts.
6. Available in 4F—4B, or 6F—6B Contacts.
7. Available with Std. AAR Terminal Posts or with Hubbell Quick Disconnect Terminals.

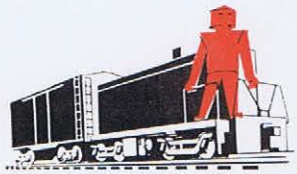

Transcontrol Corp.

Sole distributors—2 Yennicock Avenue, Port Washington, N.Y.
Tel. PO 7-4500

Reprinted from RAILWAY SIGNALING & COMMUNICATIONS March 1959

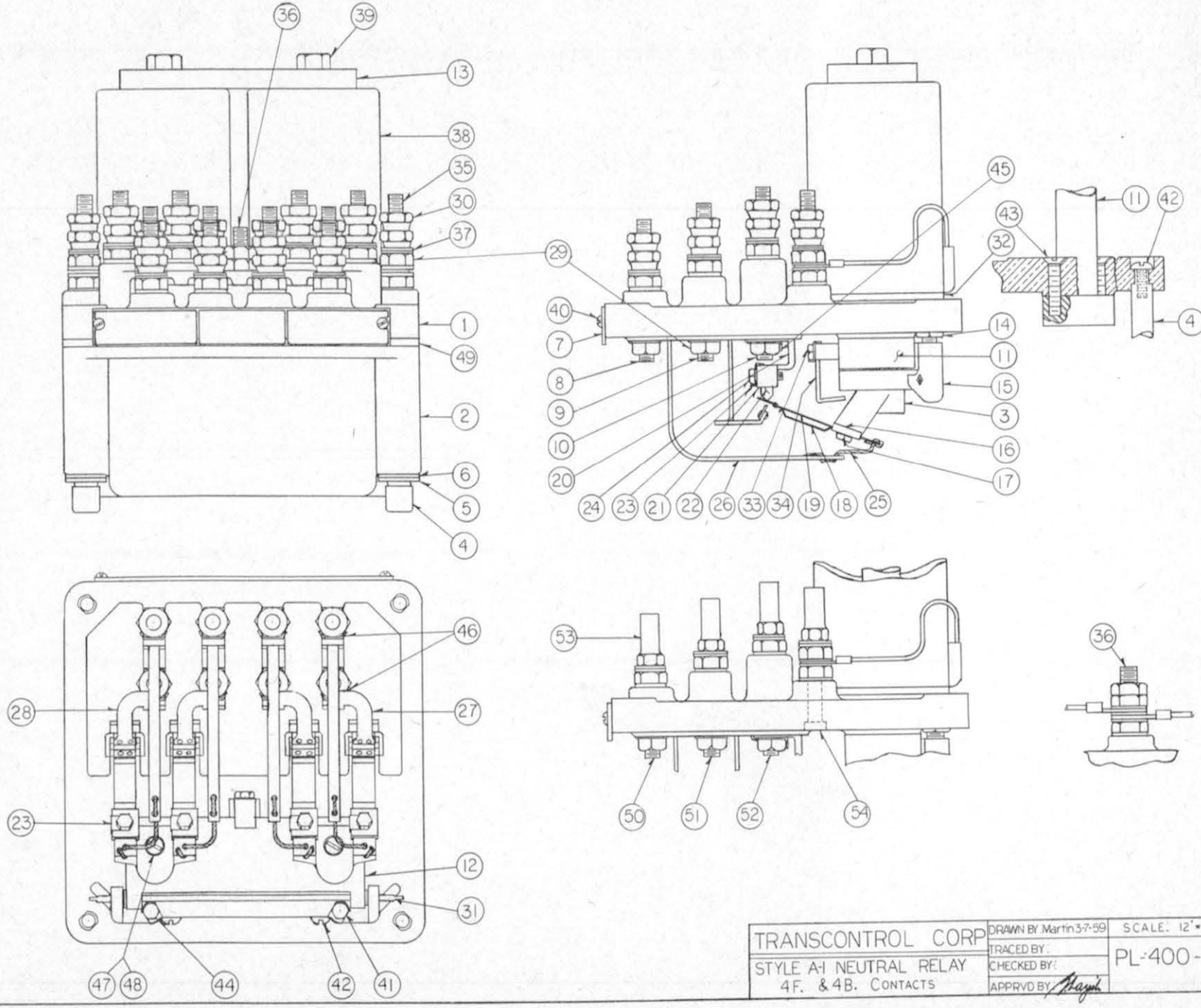
36
39
13
38
35
30
37
29
1
49
2
6
5
4
45
43
32
11
42
4
40
7
8
9
10
20
14
11
15
3
16
17
24
23
21
22
26
33
34
19
18
25
46
28
27
23
12
31
47
48
44
42
41
53
50
51
52
54
36
TRANSCONTROL CORP
STYLE A-1 NEUTRAL RELAY
4F. & 4B. CONTACTS
DRAWN BY Martin 3-7-59
TRACED BY:
CHECKED BY:
APPRVD BY:
SCALE: 12" = 1'0"
PL-400-1

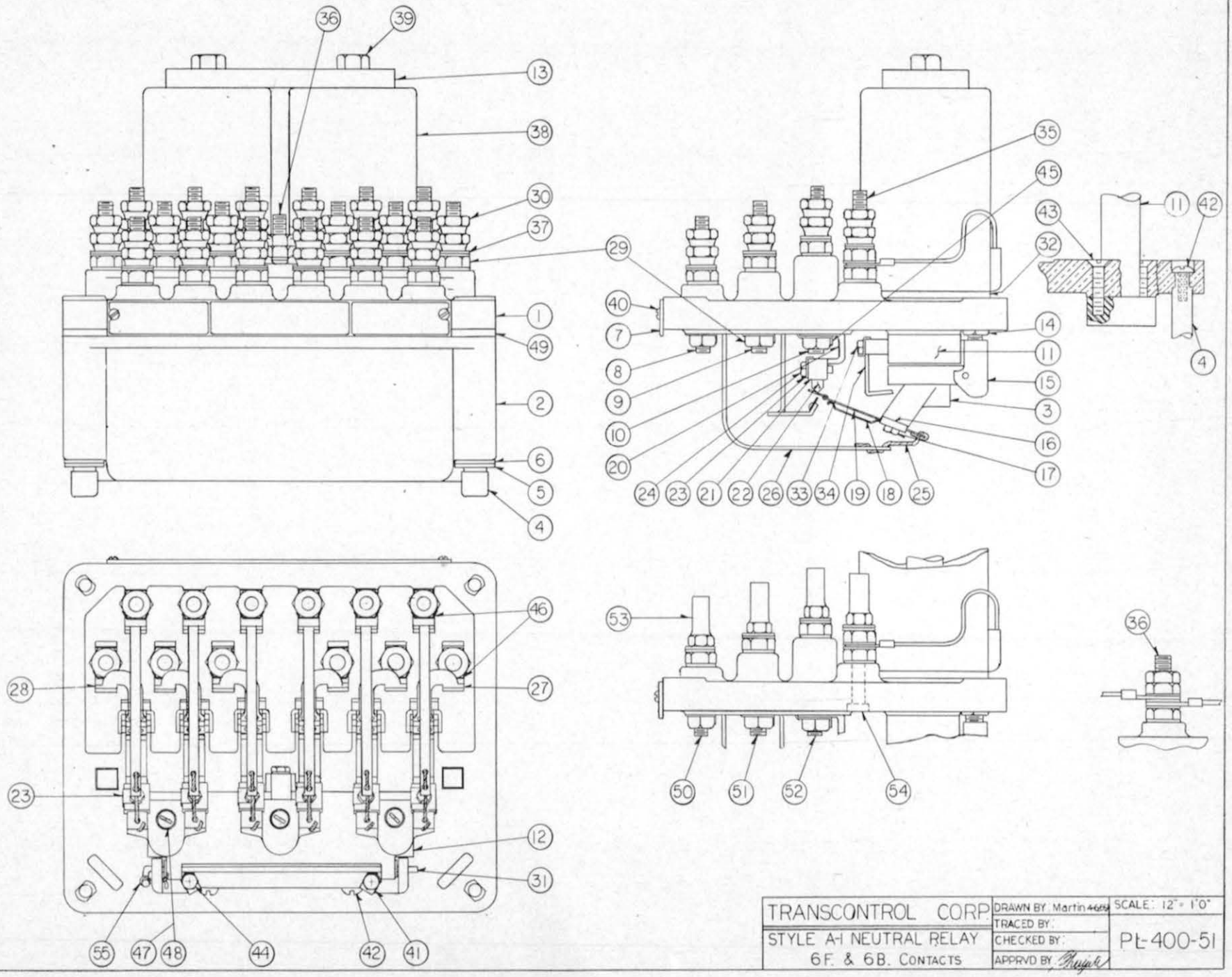

TRANSCONTROL CORP.	DRAWN BY: Martin 4669	SCALE: 12" = 1'0"
STYLE A-1 NEUTRAL RELAY 6F. & 6B. CONTACTS	TRACED BY:	PL-400-51
	CHECKED BY:	
	APPRVD BY: Rujak	

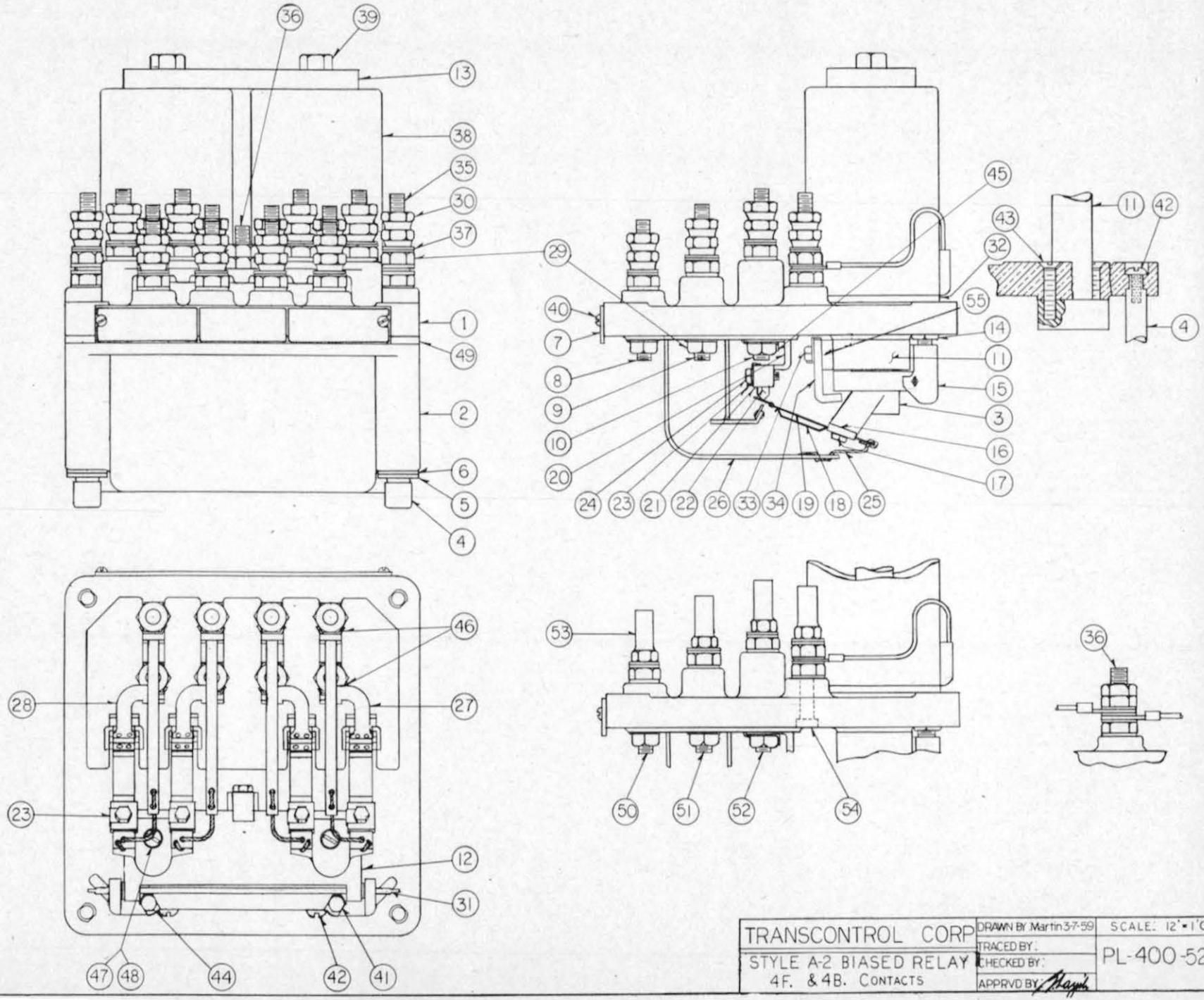
36
39
13
38
35
30
37
29
1
49
2
6
5
4
45
43
32
55
40
7
8
9
10
20
24
23
21
22
26
33
34
19
18
25
14
11
15
3
16
17
11
42
4
46
28
27
23
12
31
47
48
44
42
41
53
50
51
52
54
36
TRANSCONTROL CORP
STYLE A-2 BIASED RELAY
4F. & 4B. CONTACTS
DRAWN BY: Martin 3-7-59
TRACED BY:
CHECKED BY:
APPRVD BY:
SCALE: 12" = 1'0"
PL-400-52

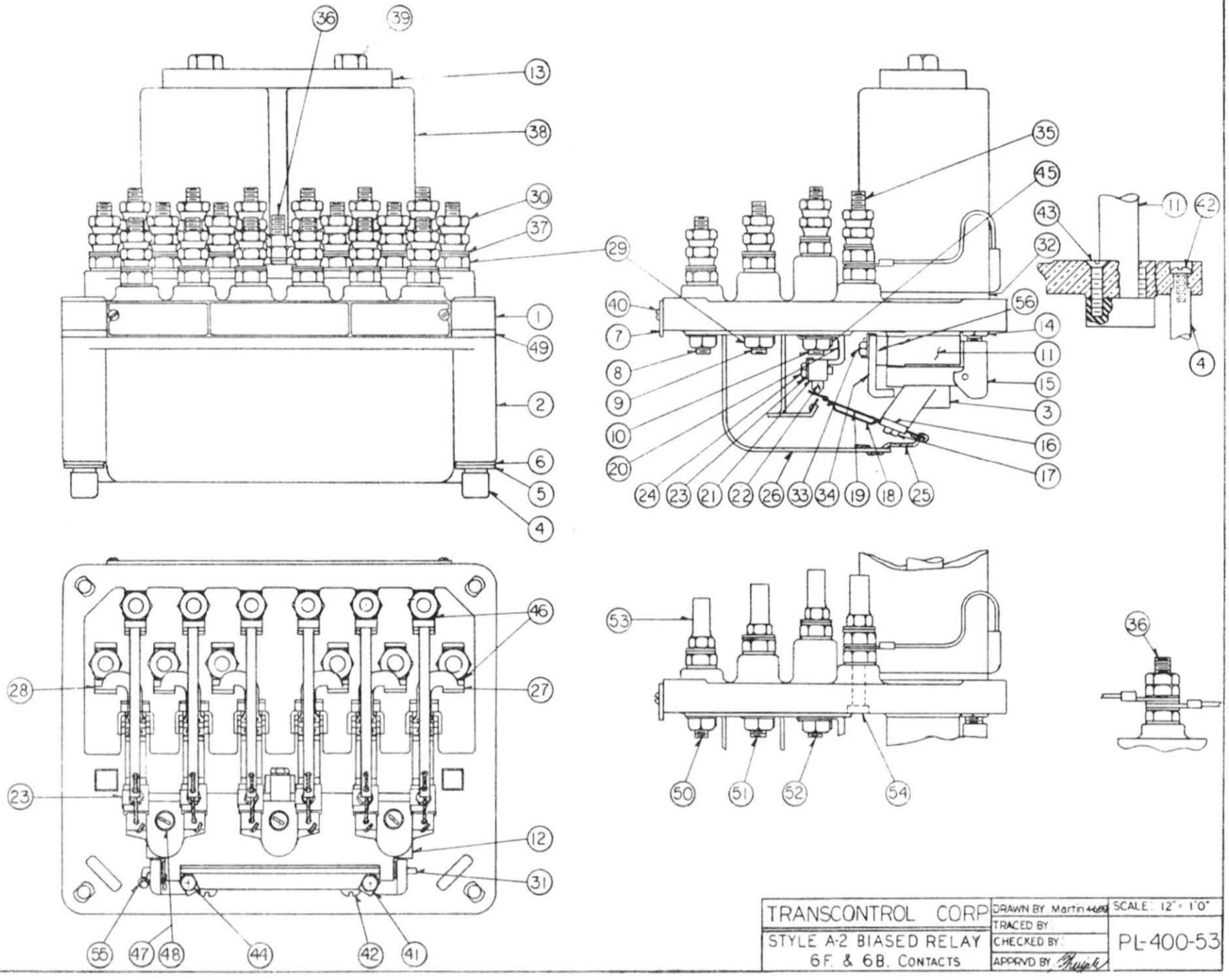

TRANSCONTROL CORP	DRAWN BY Martin	SCALE: 12" = 1'0"
STYLE A-2 BIASED RELAY 6F. & 6B. CONTACTS	TRACED BY:	PL-400-53
	CHECKED BY:	
	APPRVD BY	

TRANSCO A1 AND A2 RELAYS GENERAL INFORMATION

A.A.R. Specifications are adhered to in the design of these relays.

Neutral relays, A1, will pick up with battery applied in either polarity. Biased relays, A2, will pick up on one polarity only. With the polarity reversed the relay will not pick up or hold up, regardless of the voltage magnitude or time applied.

Slow release direct current relays have special construction which delays the opening of front contacts after the removal of coil energy.

Slow pick up direct current relays have special construction which delays the closing of front contacts after energy is applied to the relay coil.

A contact designated as FB is a dependent contact which connects a "heel" post to a "back" post when the coil is de-energized and the same "heel" post to a "front" post when the relay is energized.

LV contacts are low voltage contacts designed to carry 4 amperes continuously at first range voltages (30 volts or less).

HD contacts are heavy duty contacts designed to carry loads over 4 amperes as encountered in the lighting of highway crossing protection.

EHD contacts are extra heavy duty contacts which utilize magnetic blowouts to extinguish arcs created when loads are opened. EHD contacts can be supplied on special order for any A1 or A2 relay.

Standard molded coils are available in the following resistances: .15, 1.0, 2.0, 10, 125, 200, 250, and 500 ohms. Special tape wound coils are available with resistances of 50, 200 and 1000 ohms. The 200 ohm taped coil is the special for use on the A1X relay. Any of these coils may be used on any A1 or A2 relay, connected in series or parallel. Any combination not listed in the catalog can be made on special order.

Shock absorber platforms are included with each relay, but may also be ordered separately.

TRANSCO A1 ORDINARY ACTING NEUTRAL D.C. TRACK RELAYS

CONTACTS LV	FB CONTACTS HD	FB CONTACTS EHD	COIL RESISTANCE	WORKING CURRENT	REMARKS	CATALOG NO.
4			0.5	.220		T5-001
2	2					T5-002
	4					T5-003
6			0.5	.270		T5-004
4	2					T5-005
	6					T5-006
4			1.0	.160	Two 2 ohm coils in parallel	T5-007
2	2					T5-008
	4					T5-009
6			1.0	.194	Two 2 ohm coils in parallel	T5-010
4	2					T5-011
	6					T5-012
4			2.0	.110		T5-013
2	2					T5-014
	4					T5-015
6			2.0	.134		T5-016
4	2					T5-017
	6					T5-018
4			4.0	.080		T5-019
2	2					T5-020
	4					T5-021
6			4.0	.097		T5-022
4	2					T5-023
	6					T5-024

TRANSCO A1 ORDINARY ACTING NEUTRAL D.C. LINE RELAYS

FB CONTACTS LV	HD	EHD	COIL RESISTANCE	WORKING CURRENT	REMARKS	CATALOG NO.
4			20.0	.050		T5-040
2	2					T5-041
	4					T5-042
6			20.0	.067		T5-043
4	2					T5-044
	6					T5-045
4			62.5	.026	Two 125 ohm coils in parallel	T5-046
2	2					T5-047
	4					T5-048
6			62.5	.035	Two 125 ohm coils in parallel	T5-049
4	2					T5-050
	6					T5-051
4			100.0	.021	Two 200 ohm coils in parallel	T5-052
2	2					T5-053
	4					T5-054
6			100.0	.028	Two 200 ohm coils in parallel	T5-055
4	2					T5-056
	6					T5-057
4			125.0	.017	Two 250 ohm coils in parallel	T5-058
2	2					T5-059
	4					T5-060
6			125.0	.0216	Two 250 ohm coils in parallel	T5-061
4	2					T5-062
	6					T5-063
4			250.0	.013		T5-064
2	2					T5-065
	4					T5-066
2		2				T5-067
		4				T5-068
6			250.0	.0176		T5-069
4	2					T5-070
	6					T5-071
4		2				T5-072
2		4				T5-073

TRANSCO A1 ORDINARY ACTING NEUTRAL D.C. LINE RELAYS

FB CONTACTS LV	HD	EHD	COIL RESISTANCE	WORKING CURRENT	REMARKS	CATALOG NO.
4			400.0	.0105		T5-074
2	2					T5-075
	4					T5-076
2		2				T5-077
		4				T5-078
6			400.0	.0140		T5-079
4	2					T5-080
	6					T5-081
4		2				T5-082
2		4				T5-083
4			500.0	.0085		T5-084
2	2					T5-085
	4					T5-086
2		2				T5-087
		4				T5-088
6			500.0	.0108		T5-089
4	2					T5-090
	6					T5-091
4		2				T5-092
2		4				T5-093
4			1000.0	.0055		T5-094
2	2					T5-095
	4					T5-096
2		2				T5-097
		4				T5-098
6			1000.0	.0067		T5-099
4	2					T5-100
	6					T5-101

TRANSCO A1 SLOW RELEASE NEUTRAL D.C. LINE RELAYS

CONTACTS LV	FB CONTACTS HD	CONTACTS EHD	COIL RESIST.	WORKING CURRENT	SECONDS DA @ V	REMARKS	CATALOG NO.
4			250	.0170			T5-130
2	2						T5-131
	4						T5-132
6			250	.0216			T5-133
4	2						T5-134
	6						T5-135
4			500	.011			T5-136
2	2						T5-137
	4						T5-138
6			500	.013			T5-139
4	2						T5-140
	6						T5-141

TRANSCO A1 SLOW PICK-UP NEUTRAL D.C. LINE RELAYS

FB CONTACTS LV	HD	EHD	COIL RESIST.	WORKING CURRENT	SECONDS PU @ V	REMARKS	CATALOG NO.
4			1000	.0075			T5-150
2	2						T5-151
	4						T5-152

TRANSCO A1 SLOW PICK-UP, SLOW RELEASE NEUTRAL D.C. LINE RELAYS

FB CONTACTS LV	HD	EHD	COIL RESIST.	WORKING CURRENT	SECONDS DA @ V	SECONDS PU @ V	CATALOG NO.
4							T5-160
2	2						T5-161
	4						T5-162
6							T5-163
4	2						T5-164
	6						T5-165

TRANSCO A1L LIGHT OUT RELAYS

	FB CONTACTS		COIL			
LV	HD	EHD	RESIST.	FOR USE WITH LAMPS	REMARKS	CATALOG NO.
4			0.15	10 v. 18 watt		T5-170

TRANSCO A1P POWER TRANSFER RELAYS

FB CONTACTS LV	HD	EHD	COIL RESIST.	RECOMMENDED OPER. VOLTAGE	REMARKS	CATALOG NO.
	4		200/200	10 v.a.c.		T5-180
	6		200/200	10 v.a.c.		T5-181

TRANSCO A1X SPECIAL SLOW RELEASE NEUTRAL D.C. GATE CONTROL RELAYS

FB CONTACTS LV	HD	EHD	COIL RESIST.	WORKING CURRENT	SECONDS DA	@ V	REMARKS	CATALOG NO.
4			200	.0242	3.0	10		T5-190

TRANSCO A2 ORDINARY ACTING BIASED D.C. TRACK RELAYS

CONTACTS LV	FB CONTACTS HD	FB CONTACTS EHD	COIL RESISTANCE	WORKING CURRENT	REMARKS	CATALOG NO.
4			0.5	.210	Polar track circuit	T5-200
2	2				Two in series	T5-201
	4					T5-202
4			2.0	.140	Neutral track circuit	T5-203
2	2				Single relay	T5-204
	4					T5-205
6			2.0	.169	Neutral track circuit	T5-206
2	4				Single relay	T5-207
	6					T5-208

TRANSCO A2 ORDINARY ACTING BIASED D.C. LINE RELAYS

FB CONTACTS LV	HD	EHD	COIL RESISTANCE	WORKING CURRENT	REMARKS	CATALOG NO.
4			250.0	.012		T5-220
2	2					T5-221
	4					T5-222
4			400.0	.010		T5-223
2	2					T5-224
	4					T5-225
4			1000.0	.0061		T5-226
2	2					T5-227
	4					T5-228
6			1000.0	.007		T5-229
2	4					T5-230
	6					T5-231

TRANSCO A2 SLOW RELEASE BIASED D.C. LINE RELAYS

FB CONTACTS LV	HD	EHD	COIL RESIST.	WORKING CURRENT	SECONDS DA @ V	REMARKS	CATALOG NO.
4			10	.095			T5-240
2	2						T5-241
	4						T5-242
6			10	.117			T5-243
4	2						T5-244
	6						T5-245
6			250	.0216			T5-246
4	2						T5-247
	6						T5-248
4			500	.0122			T5-249
2	2						T5-250
	4						T5-251

TRANSCO A2 SLOW PICK-UP BIASED D.C. LINE RELAYS

FB CONTACTS LV	HD	EHD	COIL RESIST.	WORKING CURRENT	SECONDS PU @ V	REMARKS	CATALOG NO.
4							T5-260
2	2						T5-261
	4						T5-262
6							T5-263
4	2						T5-264
	6						T5-265

TRANSCO A2 SLOW RELEASE, SLOW PICK-UP BIASED D.C. LINE RELAYS

	FB CONTACTS		COIL	WORKING	SECONDS	SECONDS	
LV	HD	EHD	RESIST.	CURRENT	DA @ V	PU @ V	CATALOG NO.
4							T5-270
2	2						T5-271
	4						T5-272
6							T5-273
4	2						T5-274
	6						T5-275

TRANSCO SHOCK ABSORBER PLATFORMS FOR A1 OR A2 RELAYS

DESCRIPTION	CATALOG NO.
Shock Absorber Platform for 4 point A1 or A2 Relays	T5-280
Shock Absorber Platform for 6 point A1 or A2 Relays	T5-281

TRANSCO COILS FOR A1 OR A2 RELAYS

Res.	Turns	Wire Size	Color	Molded	Taped	Remarks	Catalog No.
0.15	180	14	Green	X			T5-282
1.0	675	16	Tan	X			T5-283
2.0	995	17	Tan	X			T5-284
10.0	2000	21	Blue	X			T5-285
50.0					X		T5-286
125.0	7850	22	Blue	X			T5-287
125.0	7850	22	Red	X			T5-288
200.0	9500	27	Blue	X			T5-289
200.0	9500	27	Green	X			T5-290
200.0					X	For A1X	T5-291
250.0	10000	28	Red	X			T5-292
1000.0					X		T5-293

TRANSCO A1 coils will fit GRS K4 and K6 relays or WABCO DN11 and DN26 relays. Transcontrol has a special mold for GRS K2 coils.

Transcontrol...

PD-1 Vital Relays
Rear or Front Service Plug-in Type

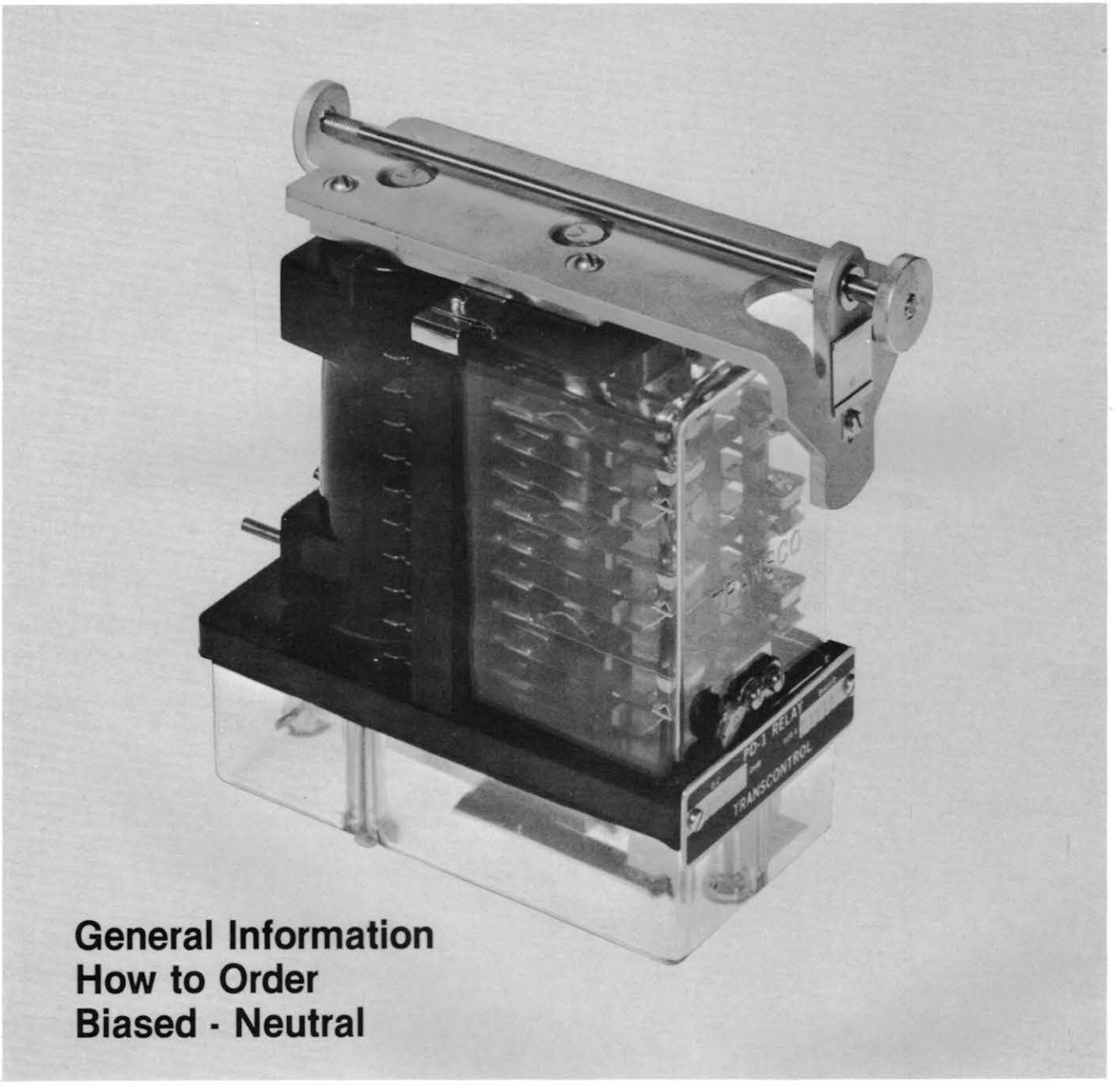

General Information
How to Order
Biased - Neutral

Transcontrol A Siemens Company

General Information

General Information

Transcontrol offers a full line of plug-in relays for railway and transit signal applications. Transcontrol relays are designed and manufactured to meet the AAR recommended practices for vital signal relays. Transcontrol PD-1 Relays offer the following features:

1. Mounting with either rear or front service plug couplers.
2. Insulated to withstand a 3000 V test voltage against ground between all parts of electric circuit and other metallic parts insulated therefrom.
3. Temperature range: -40°F (-40°C) to +185°F (+80°C)
4. Wire connections with commercially available fast-on connectors for easy wiring for OEM users.
5. Plug-in contact for easy replacement.
6. Wide selection of coil resistance and contacts available.
7. Contact mechanism protected by a transparent dust cover for easy visual inspection.
8. Relay locks securely in the service position.
9. Coded index pins to assure correct relay insertion.
10. Front testing points available.
11. Plug boards arranged to accept two independent connections.

Relay Description

PD-1 Relays have been developed and are manufactured to meet the special needs of vital circuits in railroad and transit signal systems. Plug-in relays allow the concentration of a large number of relays in a relatively small area. Transcontrol offers plug couplers for both front and rear service. For shelf-mounting, a support bracket is combined with a front service plug coupler. The wires to the plug coupler are fastened by a removable solderless connector, available either with or without locking feature. This allows easy wiring into any system by OEM users.

Transcontrol relays are manufactured under strict quality control to yield a product of consistant reliability.

Magnetic Circuit

Non-aging materials are used for the structure of the magnetic circuits. The coils and contacts can be replaced easily without disturbing the air gap of the magnetic circuit.

Note: Shown with mounting bracket removed

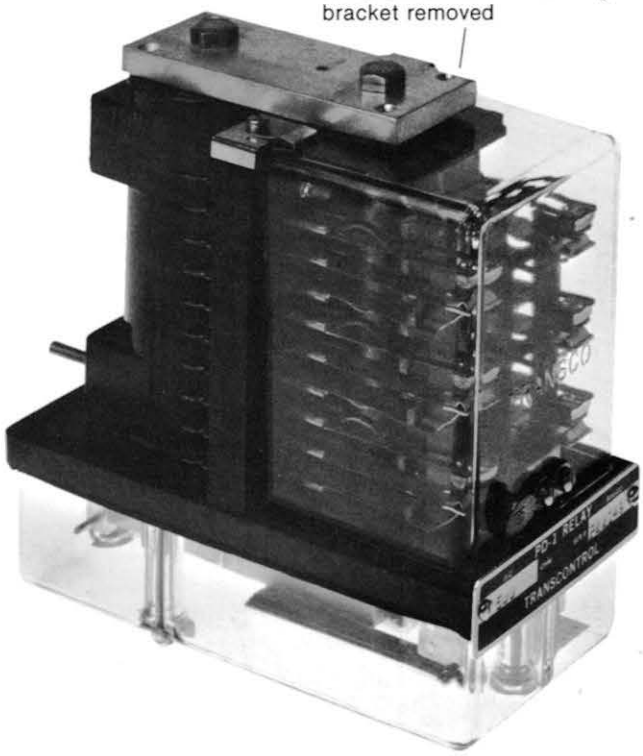

Relay	Height	Width	Depth	Weight
PD-1 Standard	6½"	3¼"	6¾"	6.3 lb
PD-1 - 1C	6½"	3¼"	6¾"	
PD-1 - SPU	6½"	3¼"	6¾"	9.5 lb
PD-1 - MS	6½"	3¼"	6¾"	
PD-1 - Xt	6½"	3¼"	6¾"	26 lb

RELAY CONTACTS WITH SPECIAL CHARACTERISTICS

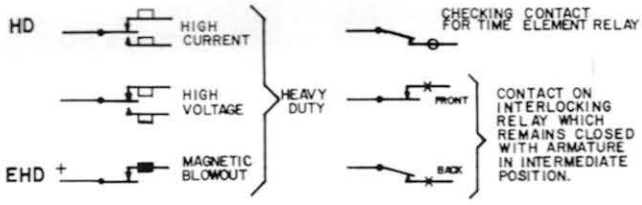

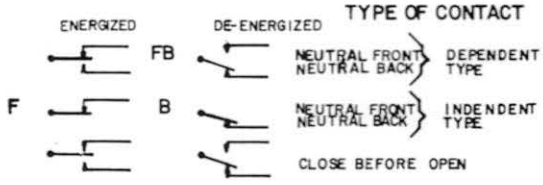

NOTE: CONTACT CHARACTERISTICS MAY BE COMBINED TO FORM ADDITIONAL SYMBOLS AS REQURED.

Slow pickup and slow release PD-1 relays are available. These characteristics are achieved by alteration of the magnetic structure.

PD-1 relays are also available as a magnetic stick relay. In this case, a permanent magnet is part of the magnetic structure.

Contacts

Contact fingers and springs are manufactured out of spring tempered phosphore bronze. Individual contacts which are removable can be easily replaced. The movement of the armature operates the heel spring to assure proper contact wiping for self-cleaning. Plug connectors are all plated to offer lowest contact resistance. The contact material for low voltage front contacts is silver carbon. The heel and back contacts are made from fine silver. Heavy-duty contacts are of a silver-to-metal impregnated carbon design.

Contact rating:

The standing low voltage safety front contact is rated at 4 AMP continuously.

Heavy duty contacts are rated at 10 AMP continuously.

Cover

The armature and contact assembly of the relay is protected against moisture, dust and mechanical damage with a transparent non-yellowing dust cover. Additionally, gaskets are used to assure the proper tightness.

Test Contact

Transcontrol plug couplers provide a test contact which is in series with the relay coil. This contact permits the relay to be de-energized when unplugging the relay or removing the wires. In addition, the test contact permits for the measuring of the relay current by inserting a PD-1 current test probe.

Mounting

Transcontrol relays are mechanically secured to their plug couplers allowing for easy removal of the relays which are designed to be mounted in signal cases or houses.

Relay Voltage

Transcontrol relays are manufactured for different voltage applications. For further details consult the relay tabulation. Higher voltages may be used, however, the maximum dissipating power of the coil should not exceed 10 W.

Plug Coupler

Plug couplers must be ordered separately. Transcontrol furnishes two types of plug couplers. The PD-1 relays are interchangeable between the two plug couplers if the corresponding mounting bracket is used.

a. Rear Service Plug Coupler Application
The rear service plug couplers are permanently mounted on the relay rack. The wires are attached to the plug coupler by means of connectors from the rear.

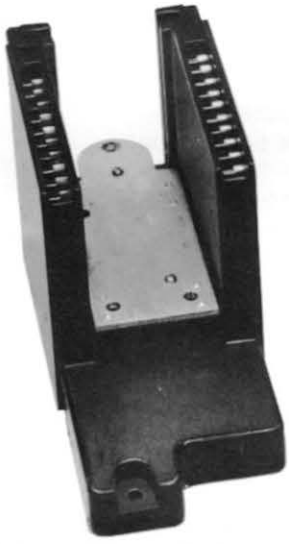

Rear Service Plug Coupler

Front Service Plug Coupler

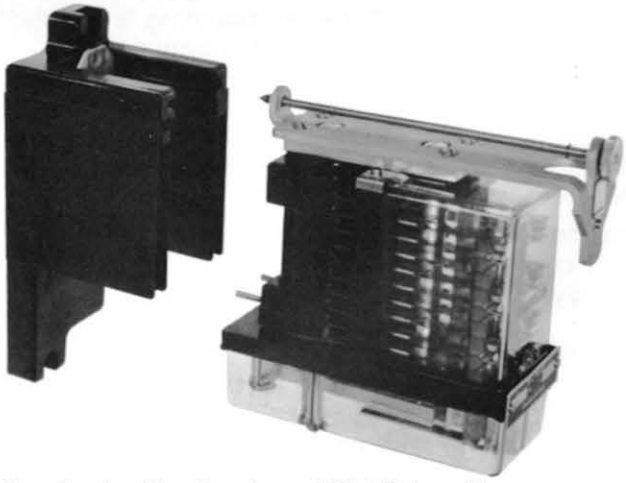

Rear Service Plug Coupler and PD-1 Relay with respective mounting bracket.

b. Front Service Plug Coupler

The Transcontrol PD-1 Relay with a front service plug coupler is mounted by supporting rods to the relay rack. The relay then is secured by two nuts. For testing purposes, the security nuts are removed and the relay is pulled forward on the mounting rods until the plug coupler connectors are easily accessable for servicing as shown in the model (see photograph).

This design offers the feature of maximum space utilization since relay racks can be mounted against a wall or on both sides of the relay rack.

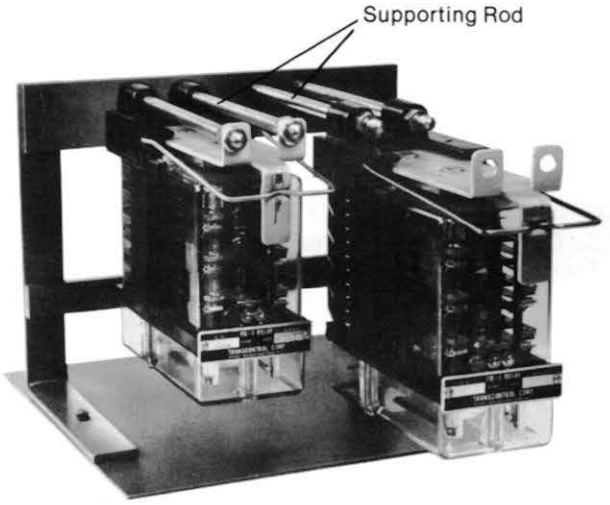

Model for mounting of 2 Front Service Plug Couplers with PD-1 Relay.

Shelf Mounting

For on board and shelf mounting of PD-1 relays, a shock absorbing base plate is available. For such mounting arrangement a front service plug coupler may be used or the wires can be directly connected to the relay terminals by means of fast on connectors.

Indexing

Transcontrol PD-1 vital relays and plug couplers are equipped with indexing.

Twelve locations for indexing pins are possible. Since always two index pins are used, this allows for 66 combinations.

A code plate which is unique to the relay is furnished with the relay independent of type of plug coupler.

Indexing of Plug Coupler For Rear-Service

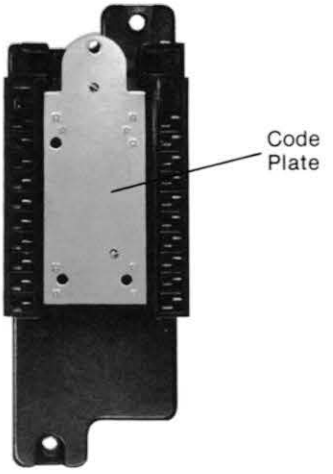

Note: Letters Not Stamped

Termination

Shelf mounted PD-1 Relays can be directly terminated or a front service coupler may be used as an interface.

Plug couplers can be terminated by solder connection or by means of fast-on connectors with or without locking feature. Transcontrol recommends the solderless terminations with an insulated sleeve.

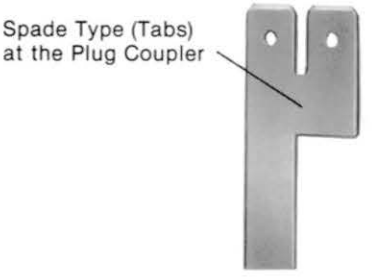

The sleeve type fast-on connectors feature a spring retension action which is supplemented by a lug engaging in a hole of the contact blade.

Solid or stranded wires are crimp-bonded to the fast on connector.

Termination Nomenclature

Rear service plug couplers are equipped with a nomenclature in order to avoid mistakes. The figures are engraved and filled with white material to allow easy identification even under poor visability conditions.

Each rear service plug coupler is equipped with 20 (2 x 10) double blade type connectors for easy termination.

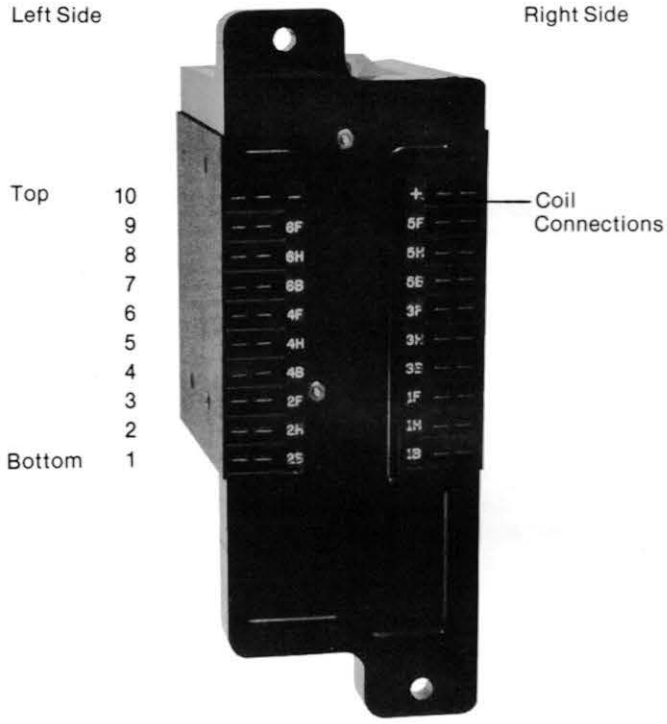

Photograph shows nomenclature for the Rear Service Plug Coupler

Mounting Arrangement

Mount of Rear Service Plug Coupler

Transcontrol plug-in relays are designed to be installed into all types of equipment racks, cases or houses. The minimum spacing for the plug coupler arrangement is shown.

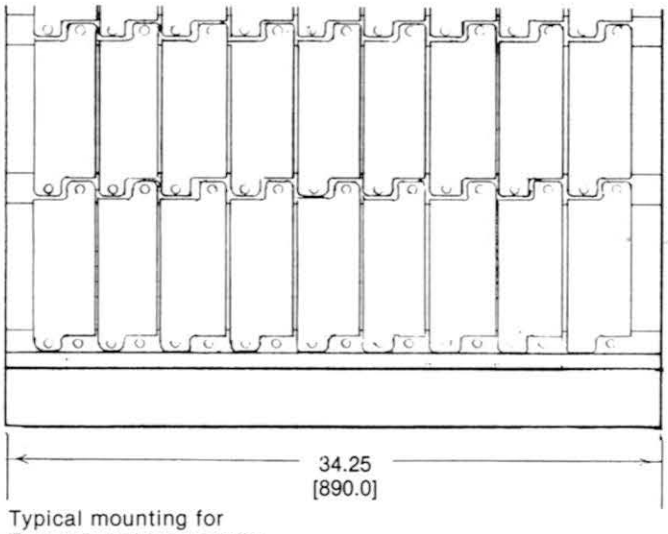

Typical mounting for Transcontrol rear service plug coupler (rear view)

Mounting of Front Service Plug Coupler

Aside from the standard rear service plug coupler for Transcontrol relays, a front service plug coupler is offered. This type of arrangement requires a different spacing.

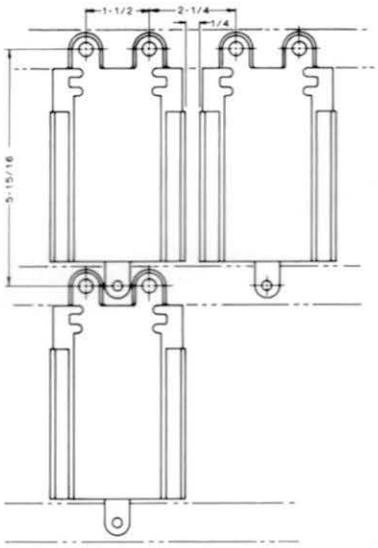

Shelf Mount

For special applications Transcontrol PD-1 relays can also be furnished with shelf mounting.

Tools and Accessories

Transcontrol can provide a broad range of tools and accessories including fast-on connectors, test plugs, crimping tools, etc.

Issued by Transcontrol Corporation, A Siemens Company
75 Marcus Drive, Melville, New York 11747 (516) 249-6000 TX 645117

CC/4800-002-121
ESP 1.5M 9/81 Printed in U.S.A.

TRANSCO PD1 RELAY INFORMATION

A.A.R. Specifications are adhered to in the design of these relays.

Neutral relays will pick up with battery applied in either polarity. Biased relays will pick up on one polarity only. With the polarity reversed the relay will not pick up or hold up, regardless of the voltage magnitude or time applied.

Slow release direct current relays have special construction which delays the opening of front contacts after the removal of coil energy.

Slow pick up direct current relays have special construction which delays the closing of front contacts after energy is applied to the relay coil.

A contact designated as FB is a dependent contact which connects a "heel" to a "back" when the coil is de-energized and the same "heel" to a "front" when the relay is picked up.

LV contacts are low voltage contacts designed to carry 4 amperes continuously at first range voltages (30 volts or less).

HD contacts are heavy duty contacts designed to carry loads over 4 amperes as encountered in the lighting of highway crossing protection.

Standard molded coils for PD1 relays are available in resistances of .15, 2.0, 250 and 500 ohms. Special taped coils of other resistances may be provided on special order.

The extremely versatile PD1 relay may be used with three mounting options. These are:

1. Shelf mounted on shock absorber platform.
2. Wall or rack mounted for front servicing.
3. Rack mounted for wiring from rear.

When ordering, refer to the mounting columns and select the catalog number for the desired mounting.

When plug couplers are used indexing is provided to prevent the replacement of a relay with another of different characteristics. Consequently, plug couplers must be ordered to match the relays as indicated in the catalog number reference columns.

TRANSCO PD1 RELAY INFORMATION

When using relay systems near solid state systems it has been found necessary to supress the inductive "kick" of the relay coils. Generally suitable is a resistor four times the coil resistance. As an option this resistor may be provided internally in the PD1 relays. If a resistor is desired, select a catalog number which has an X in the resistor column.

All PD1 relays are provided with shipping screws.

All connections to PD1 relays or plug couplers are made with a .250 inch wide, slide on, solderless connector. This connector has become a standard in many industries and is readily available as a 250 Faston. Contact fingers on the relay will each accept one of these connectors. Plug couplers are designed so that each contact will accept two connectors, thus permitting loop wiring.

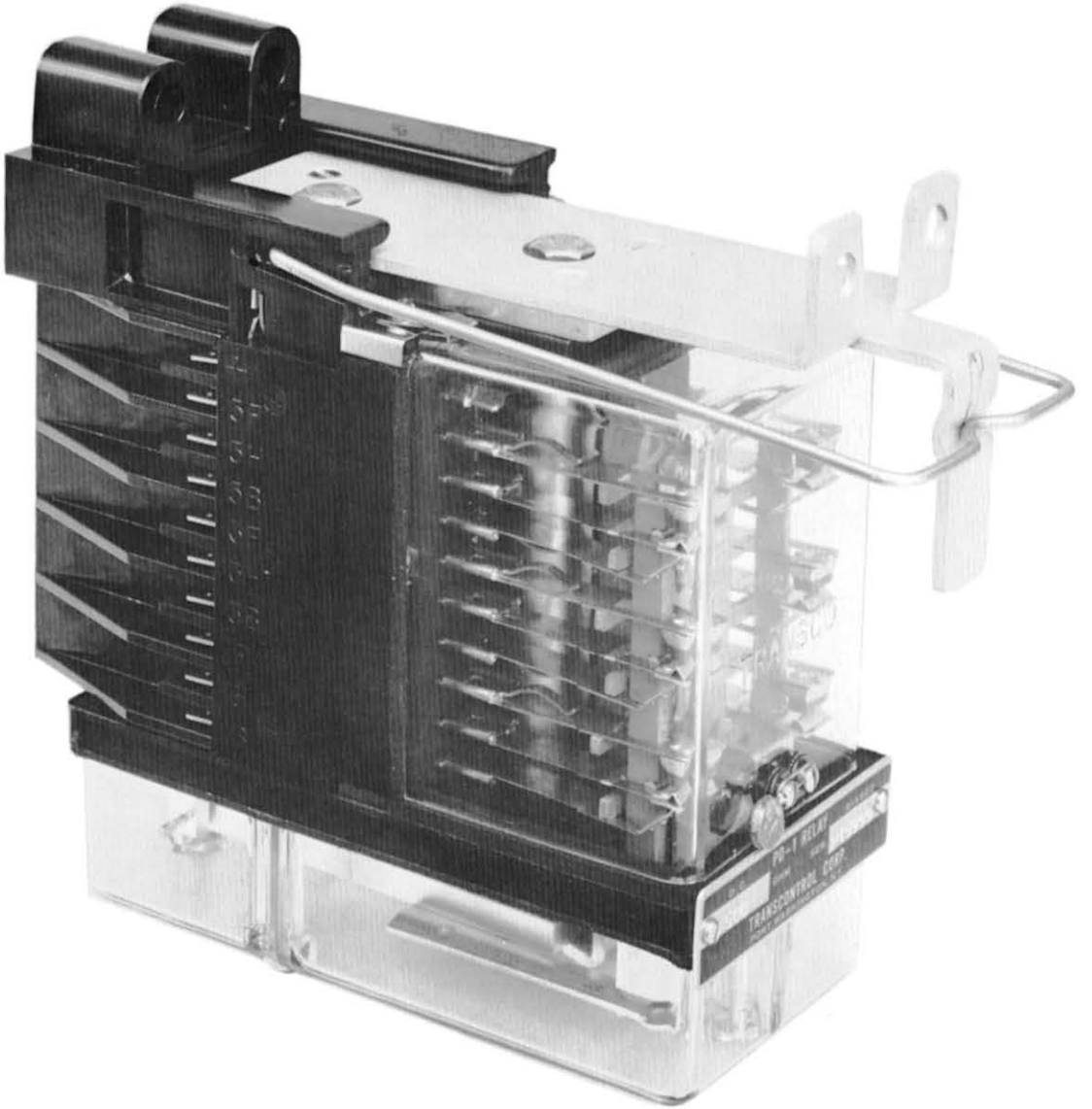

PD-1 RELAY

WITH PLUG COUPLER

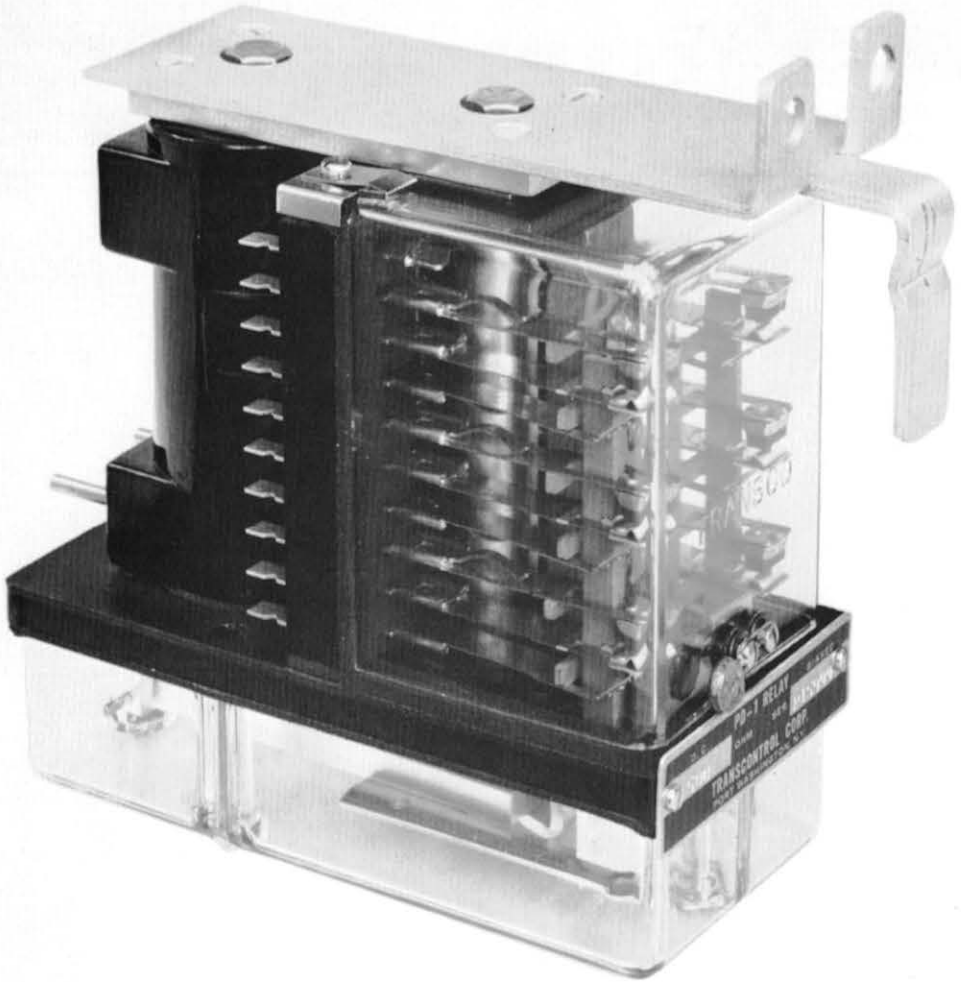

PD-1 RELAY

WITHOUT PLUG COUPLER

TRANSCONTROL CORP.
PORT WASHINGTON, N.Y. 11050

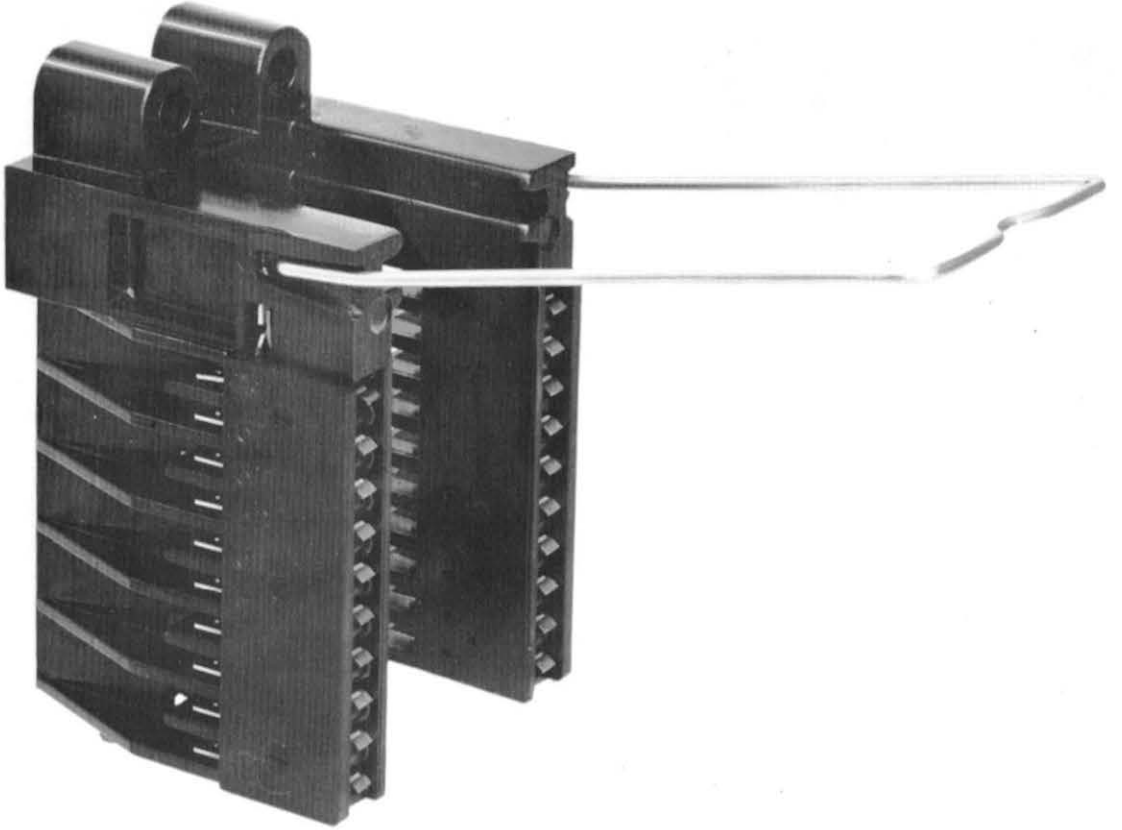

PD-1 PLUG COUPLER

TRANSCONTROL CORP.
PORT WASHINGTON, N.Y. 11050

TRANSCO

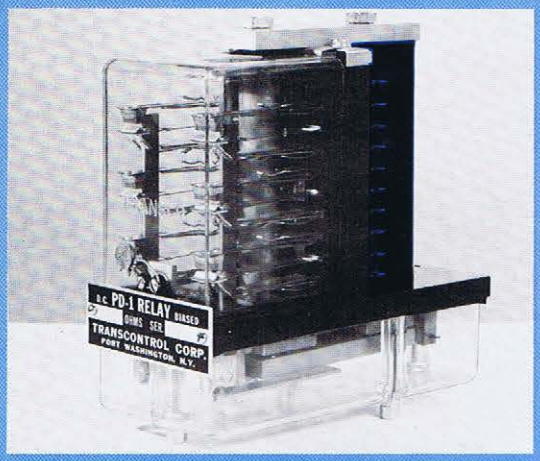

Relay Without Plug Coupler

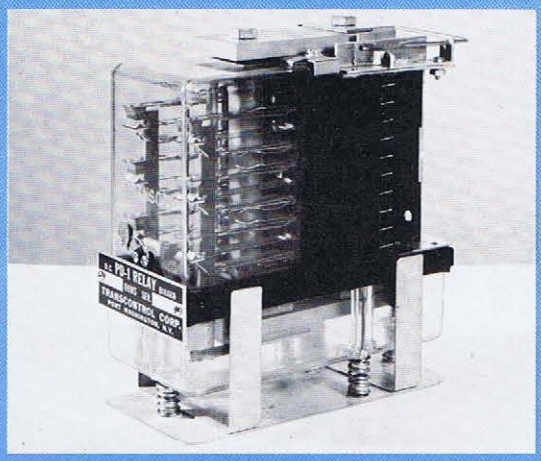

With Plug Coupler Shelf Mounted

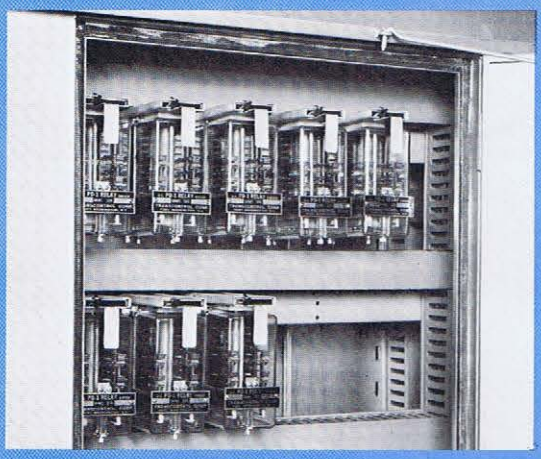

Relays Mounted on Rack

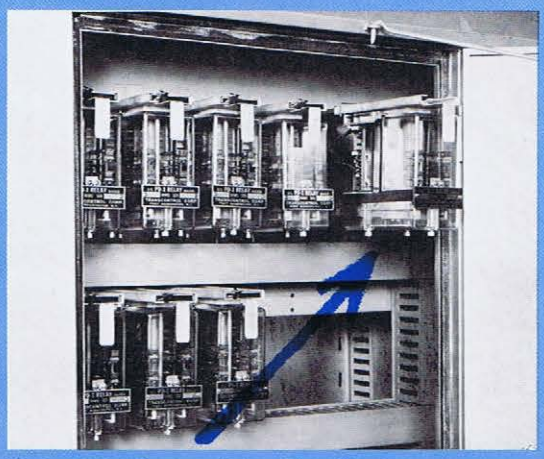

Relay Slid Forward for Servicing

STYLE PDI PLUG-IN RELAYS FOR RELAY RACK, WALL OR SHELF MOUNTING WIRED AND SERVICED FROM FRONT

Salient Features

(1) Low cost
(2) Small Size W=3¼" H=7" D=6¾'
(3) Meets all AAR requirements
(4) Access to rear of relay unnecessary
(5) Available in 2 pt., 4 pt., 6 pt.
(6) Biased, slow release, power off, light out
(7) Standard or heavy duty contacts
(8) Two terminal tabs for each contact

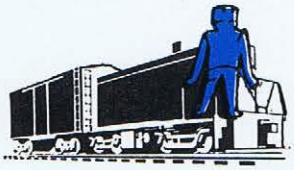

Transcontrol Corp.

2 YENNICOCK AVENUE, PORT WASHINGTON, N. Y.

TRANSCO PD1

THE VERSATILE SIGNAL RELAY

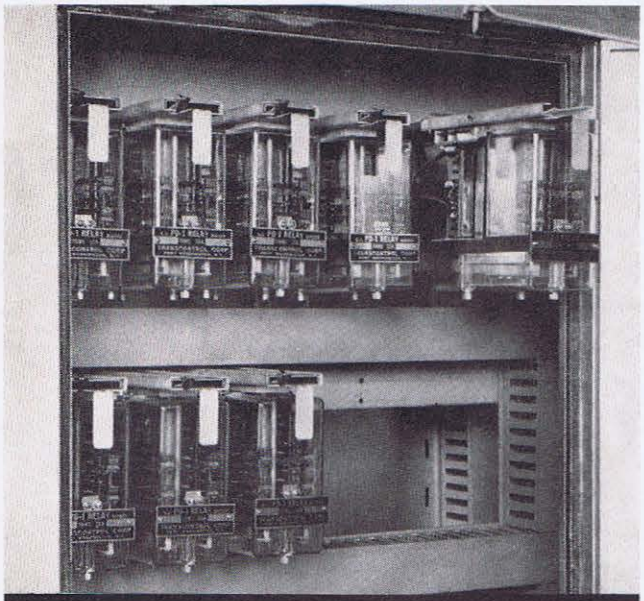

RACK MOUNTED FOR FRONT SERVICING
(Relays can be mounted back to back)

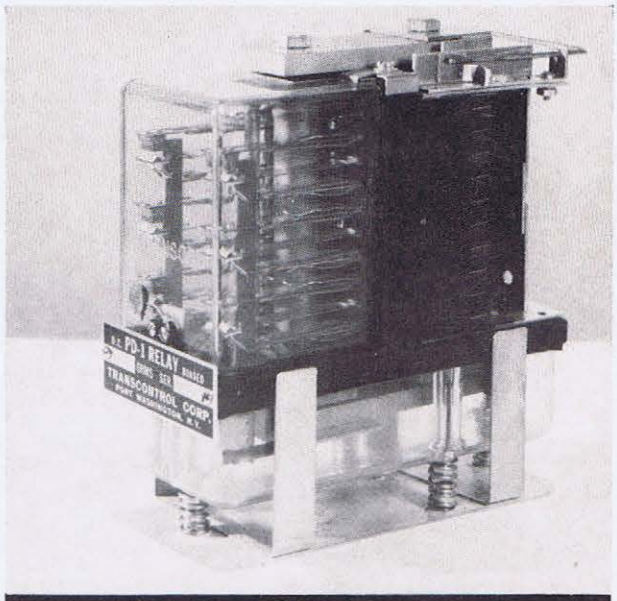

SHELF MOUNTED WITH OR WITHOUT
PLUG COUPLER
(Alongside conventional relays if necessary)

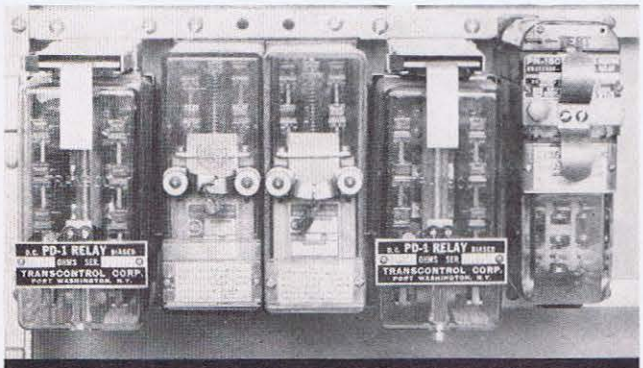

RACK MOUNTED FOR REAR SERVICING
(Alongside relays of other manufacturers
if necessary)

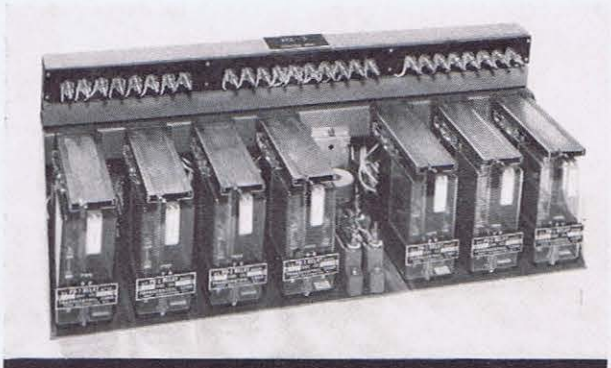

IDEAL FOR "PACKAGING"
(Similar to Transco HX3 Units)

THOUSANDS IN SERVICE

Transcontrol Corp.

Tel. 516-883-6900 • No. 2 YENNICOCK AVE., PORT WASHINGTON, N.Y.

Reprinted from *Railway Signaling & Communications*, January, 1969

TRANSCO PD-1

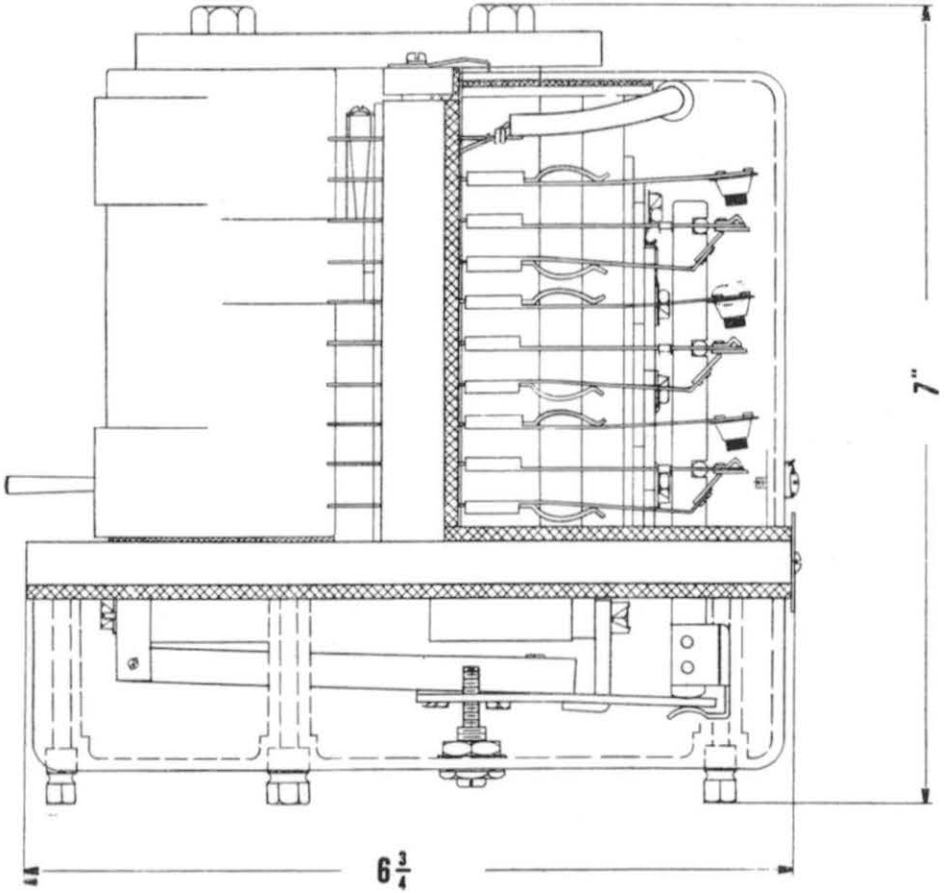

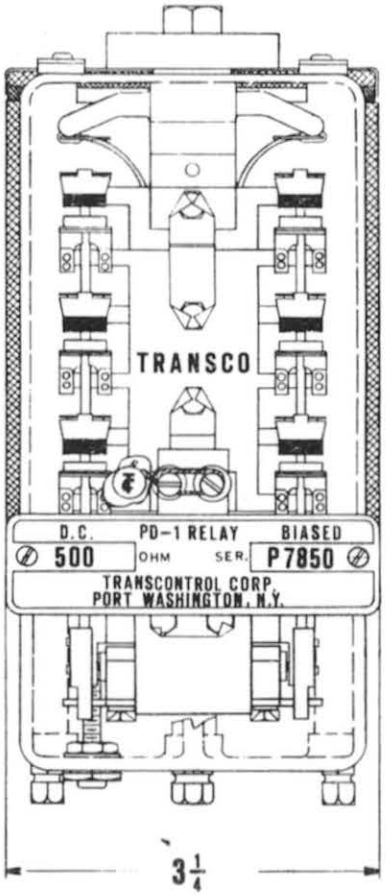

PD-1 Relay with Removable Contacts

DWG. BA97 SH.15

TRANSCO PD-1

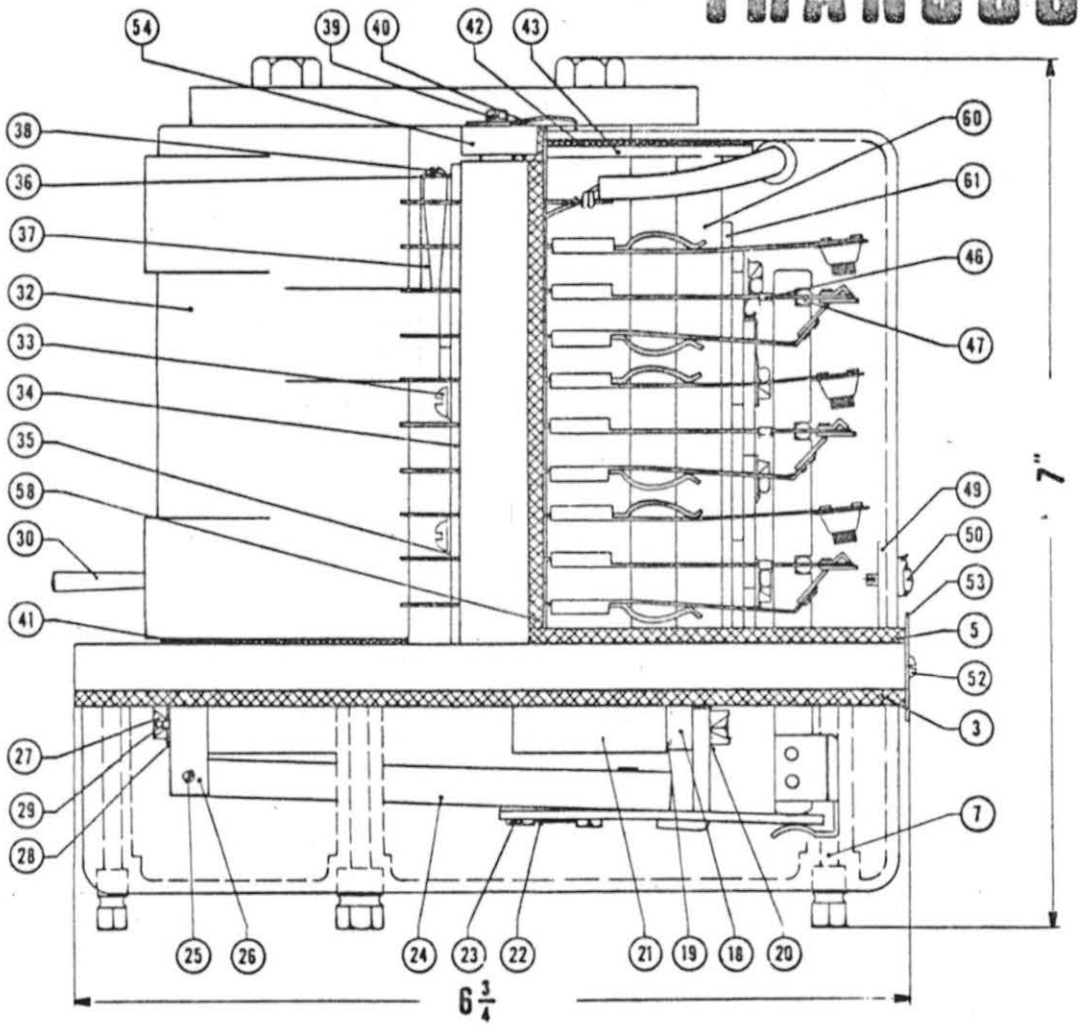

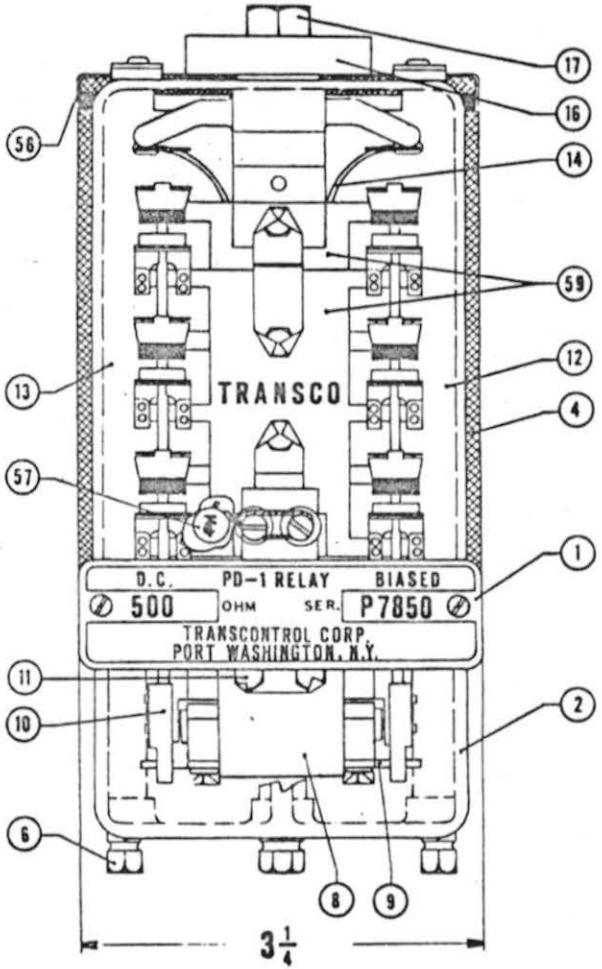

PD-1 Relay with Removable Contacts

DWG. BA97 SH.1

PD-1 BIASED RELAY
DETAIL PARTS

REF. DRAWING BA97, SH. 1

ITEM NO.	NUMBER REQUIRED	DESCRIPTION
1	1	Top plate
2	1	Lower case
3	1	Lower case gasket
4	1	Upper case
5	1	Upper case bottom gasket
6	4	6-32 stud
7	4	6-32 x 1 7/8" S.S.F.H.M. screw
8	1	Armature backstop
9	2	Armature extension
10	2	Pusher rod assembly
11	2	8-32 x 1/2" H.H.S.S.M. screw
12	1	Contact block assembly R.H.
13	1	Contact block assembly L.H.
14	2	Inner coil connector
15	4	6-32 x 3/8" P.H.S.S.M. screw
16	1	back strap
17	2	5-16 x 3/4" hex head cap screw
18	1	Permanent magnet
19	1	Brass spacer
20	1	Lock washer
21	2	Core
22	2	Lock washer
23	4	6-32 x 3/8" H.H.S.S.M. screw
24	1	Armature assembly
25	1	Pivot bearing shaft
26	1	Armature bracket
27	2	8-32 x 1/2" H.H.S.S.M. screw
28	1	Lock washer
29	2	Dowel pin
30	2	Indexing pin
31	2	Speed nut
32	1	Coil
33	4	6-32 x 3/8" P.H.S.S.M. screw
34	1	Back plate
35	4	#6 split lock washer
36	2	#4 split lock washer
37	2	Outer coil connector
38	2	4-40 x 1/4" R.H. BRASS N.P.M. screw
39	2	6-32 x 1/4" P.H.S.S.M. screw
40	2	Top cover clips

PD-1 BIASED RELAY
DETAIL PARTS

REF. DRAWING BA97, SH. 1

ITEM NO.	NUMBER REQUIRED	DESCRIPTION
41	1	Rubber "O" ring
42	1	Top cover upper gasket
43	1	Upper tie plate
44	1	4-40 x 1/4" F.H.S.S.M. screw
45	1	Spacer rod
46	6	Pusher rod locking clip
47	6	Pusher rod roller
48	1	Lower Tie plate
49	1	Top cover bracket
50	2	6-32 x 1/2" P.H.(drilled) S.S.M. screw
51	1	4-40 x 5/8" F.H.S.S.M. screw
52	2	4-40 x 1/4" R.H.S.S. self tapping screw
53	1	Name plate
54	1	Tie bar
55	2	4-40 x 1/4" R.H.S.S.M. screw
56	1	Finishing plate
57	1	Lead seal
58	1	Top cover rear gasket

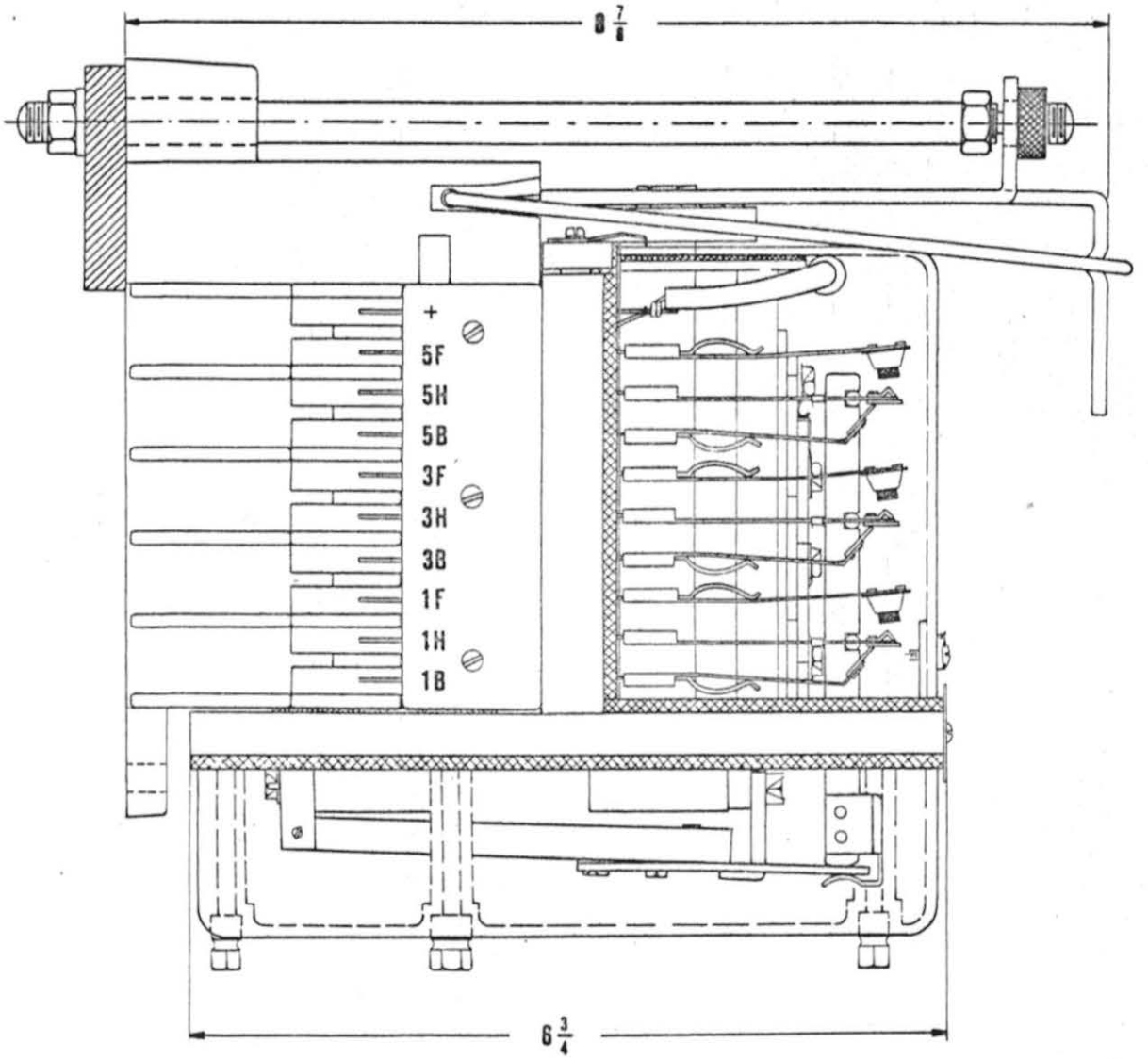

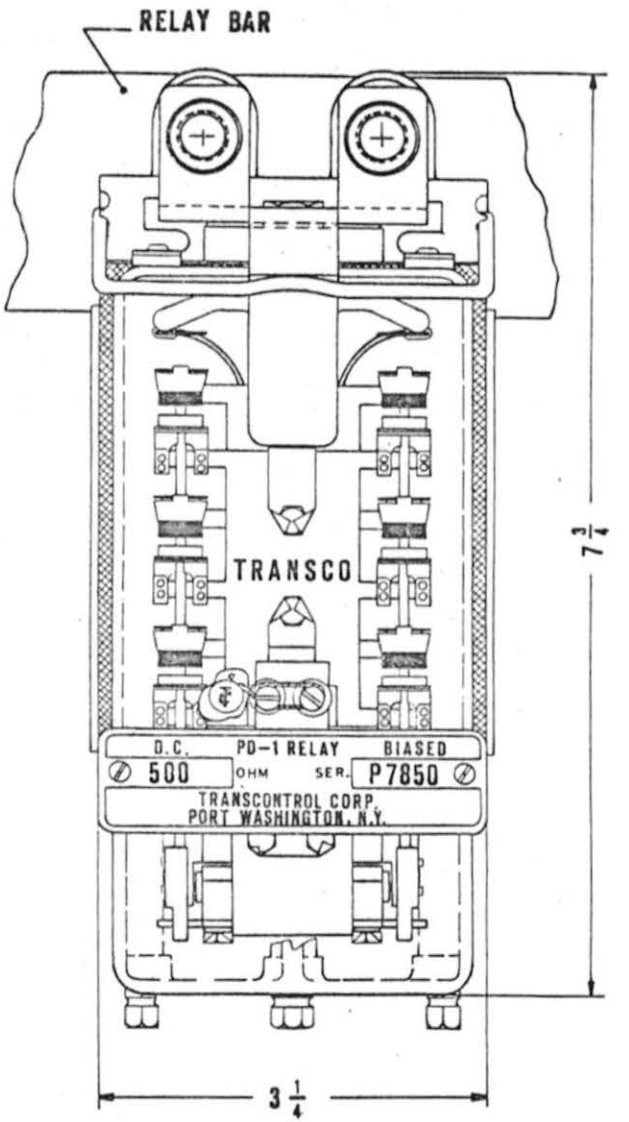

TRANSCO PD-1 Relay with Removable Contacts

Arranged for Rack Mounting and Front Servicing

DWG. BA97 SH. 16

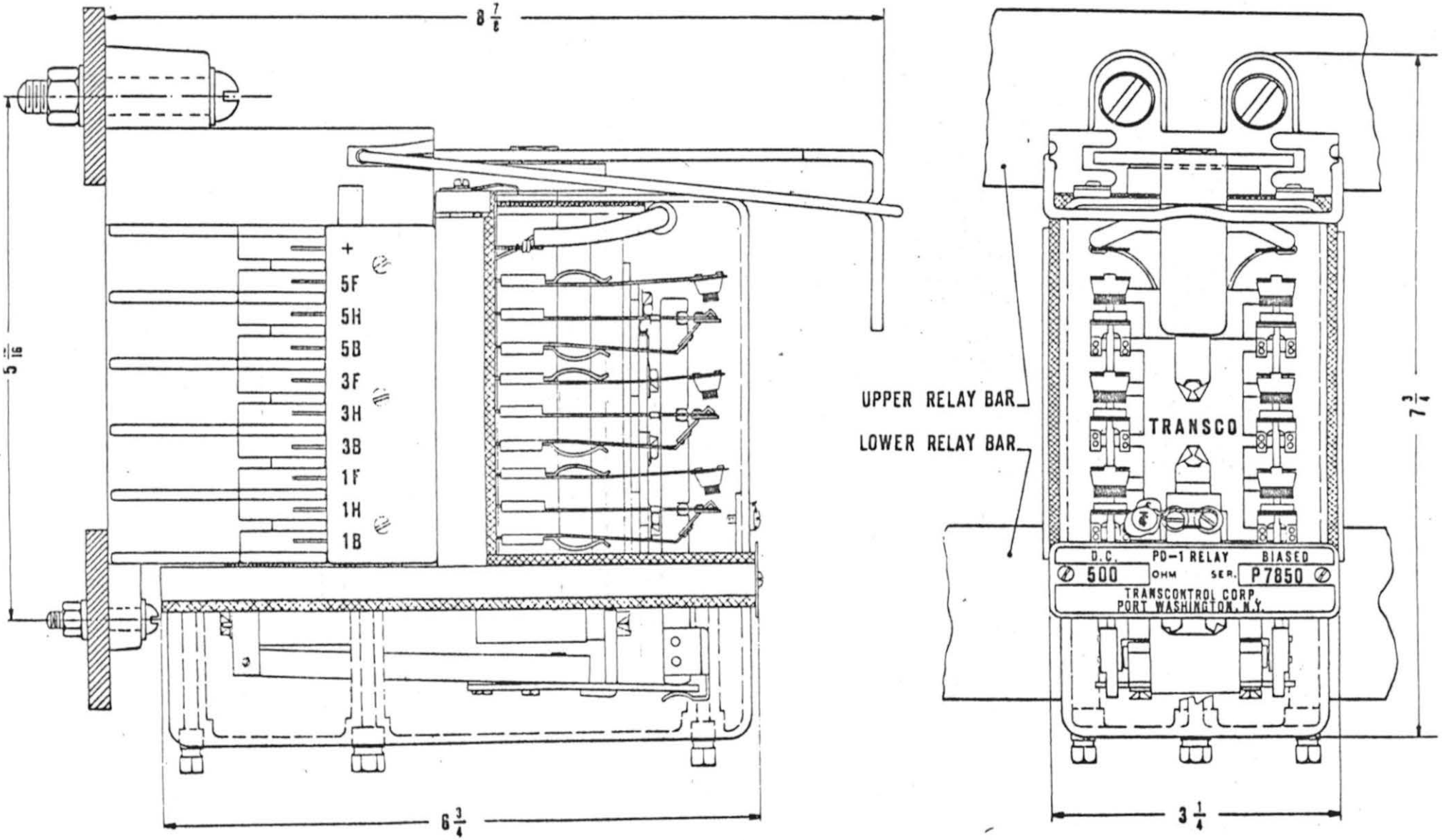

TRANSCO PD-1 Relay with Removable Contacts

Arranged for Rack Mounting and Rear Servicing

DWG. BA87 SH.1

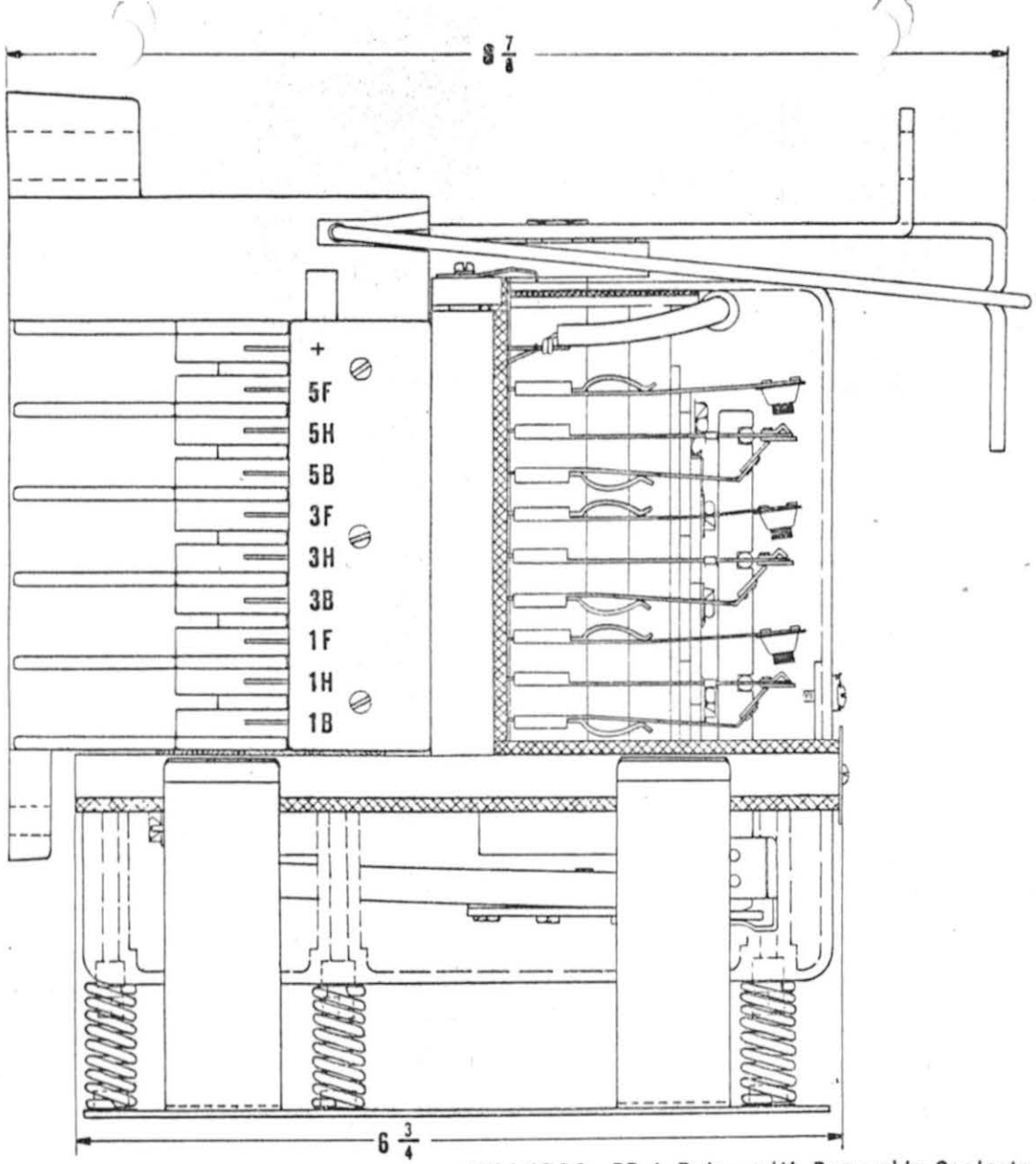

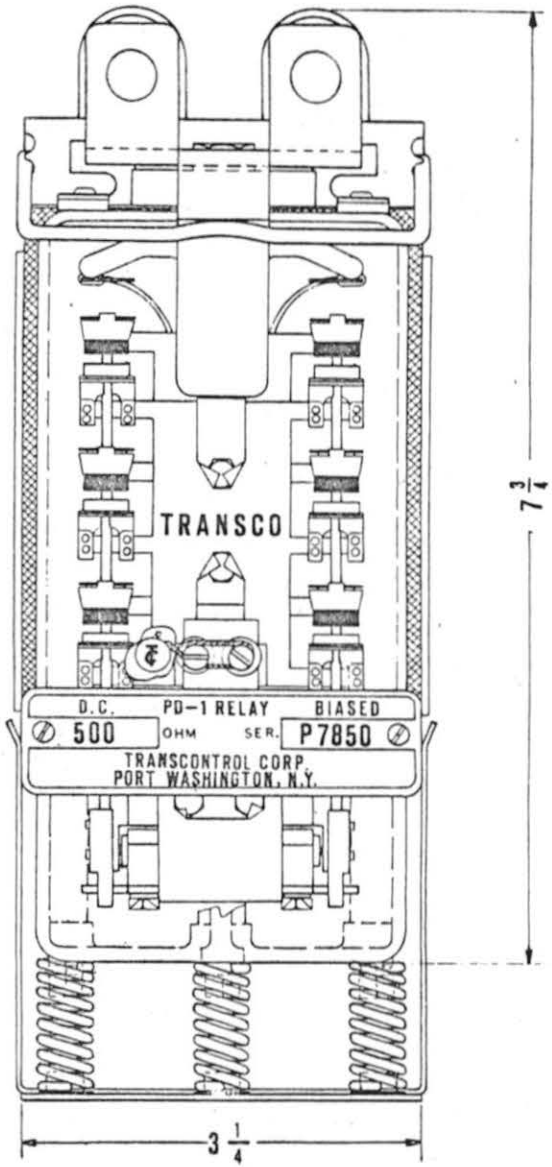

TRANSCO PD-1 Relay with Removable Contacts

Arranged for Shelf Mounting

DWG. BA97 SH.18

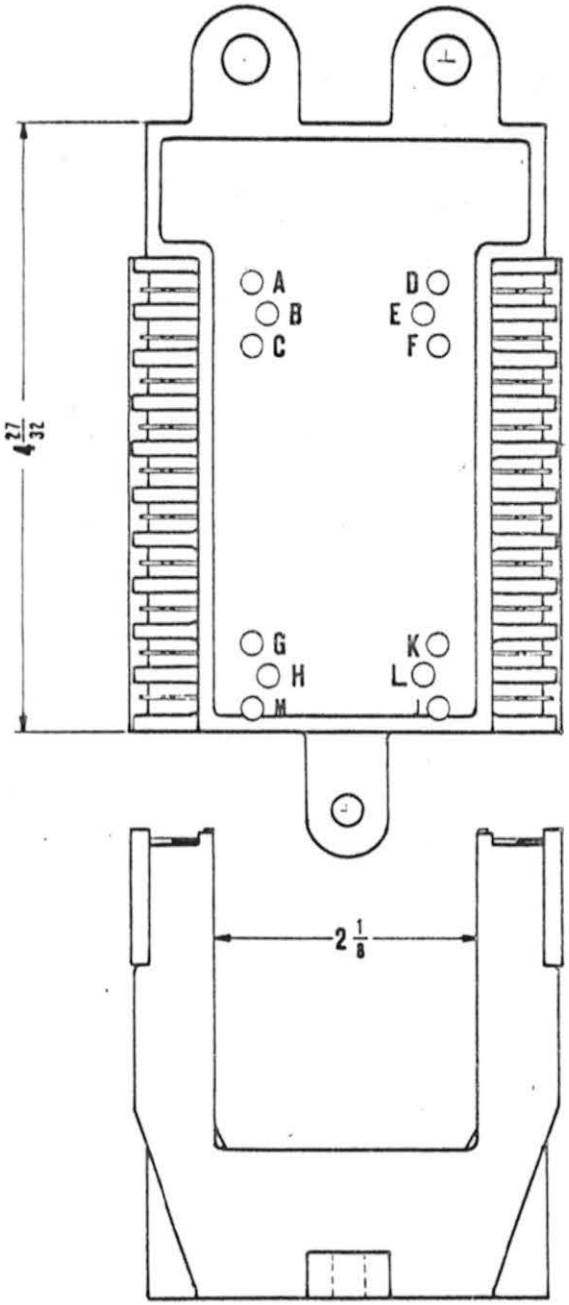

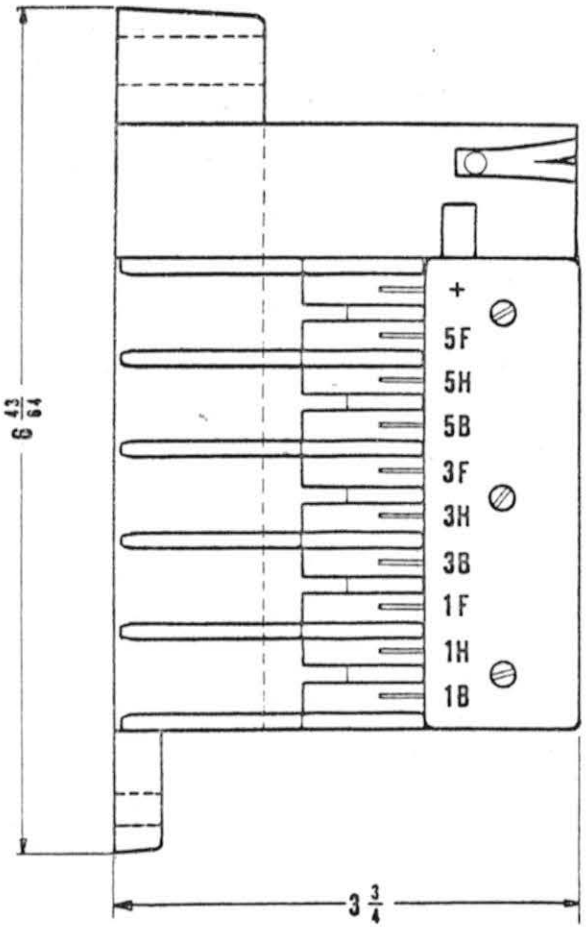

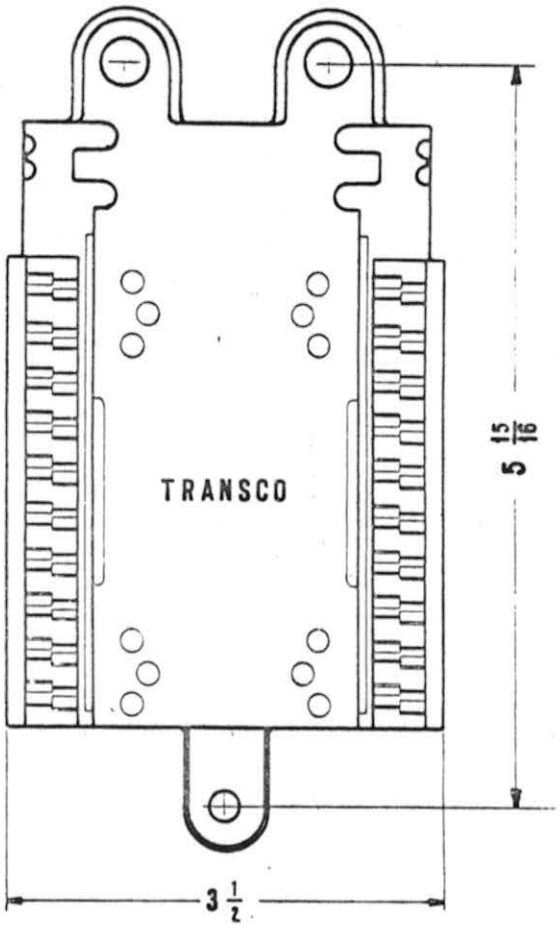

MOLDED PLUG COUPLER

FOR PD-1 RELAY

SCALE 1:1

MOLDED PLUG COUPLER FOR PD-1 RELAY			
TRANSCONTROL CORP. PORT WASHINGTON, N.Y.	DATE 10.8.73	DRAWING BA 99	SH. NO. 9

TRANSCO PD1 ORDINARY ACTING NEUTRAL D.C. TRACK RELAYS

FB CONTACTS LV	FB CONTACTS HD	COIL RESIST.	WORKING CURRENT	SHELF MOUNT	FRONT SERVICE	RACK MOUNT	REMARKS	RELAY CAT. NO.	PLUG COUPLER CAT. NO.
4		2.0		X				T5-300	T5-700
4					X			T5-301	T5-800
4						X		T5-302	T5-884
2	2	2.0		X				T5-303	T5-701
2	2				X			T5-304	T5-801
2	2					X		T5-305	T5-884
	4	2.0		X				T5-306	T5-702
	4				X			T5-307	T5-802
	4					X		T5-308	T5-884
6		2.0		X				T5-309	T5-703
6					X			T5-310	T5-803
6						X		T5-311	T5-884
4	2	2.0		X				T5-312	T5-704
4	2				X			T5-313	T5-804
4	2					X		T5-314	T5-884
	6	2.0		X				T5-315	T5-705
	6				X			T5-316	T5-805
	6					X		T5-317	T5-884

TRANSCO PD1 ORDINARY ACTING NEUTRAL D.C. LINE RELAYS

FB CONTACTS LV	FB CONTACTS HD	COIL RESIST.	WORKING CURRENT	SHELF MOUNT	FRONT SERVICE	RACK MOUNT	RES. 2000 Ohm	REMARKS	RELAY CAT. NO.	PLUG COUPLER CAT. NO.
	6	500	.013	X					T5-360	T5-716
	6			X			X		T5-361	T5-717
	6				X				T5-362	T5-816
	6				X		X		T5-363	T5-817
	6					X			T5-364	T5-885
	6					X	X		T5-365	T5-885

TRANSCO PD1 SLOW RELEASE NEUTRAL D.C. LINE RELAYS

FB CONTACTS LV	FB CONTACTS HD	COIL RESIST.	WORKING CURRENT	SHELF MOUNT	FRONT SERVICE	RACK MOUNT	RES. 1000 Ohm	SECONDS DA @ V	RELAY CAT. NO.	PLUG COUPLER CAT. NO.
4		250		X					T5-380	T5-718
4				X			X		T5-381	T5-719
4					X				T5-382	T5-818
4					X		X		T5-383	T5-819
4						X			T5-384	T5-886
4						X	X		T5-385	T5-886
2	2	250		X					T5-386	T5-720
2	2			X			X		T5-387	T5-721
2	2				X				T5-388	T5-820
2	2				X		X		T5-389	T5-821
2	2					X			T5-390	T5-886
2	2					X	X		T5-391	T5-886
	4	250		X					T5-392	T5-722
	4			X			X		T5-393	T5-723
	4				X				T5-394	T5-822
	4				X		X		T5-395	T5-823
	4					X			T5-396	T5-886
	4					X	X		T5-397	T5-886
6		250		X					T5-398	T5-724
6				X			X	.8 @ 8	T5-399	T5-725
6					X			.9 @ 10	T5-400	T5-824
6					X		X	.95 @ 12	T5-401	T5-825
6						X		1.0 @ 16	T5-402	T5-886
6						X	X		T5-403	T5-886
4	2	250		X					T5-404	T5-726
4	2			X			X		T5-405	T5-727
4	2				X				T5-406	T5-826
4	2				X		X		T5-407	T5-827
4	2					X			T5-408	T5-886
4	2					X	X		T5-409	T5-886

TRANSCO PD1 SLOW RELEASE NEUTRAL D.C. LINE RELAYS

FB CONTACTS LV	HD	COIL RESIST.	WORKING CURRENT	SHELF MOUNT	FRONT SERVICE	RACK MOUNT	RES. 1000 Ohm	SECONDS DA @ V	RELAY CAT. NO.	PLUG COUPLER CAT. NO.
	6	250		X					T5-410	T5-728
	6			X			X		T5-411	T5-729
	6				X				T5-412	T5-828
	6				X		X		T5-413	T5-829
	6					X			T5-414	T5-886
	6					X	X		T5-415	T5-886

TRANSCO PD1 SLOW PICK-UP NEUTRAL D.C. LINE RELAYS

FB CONTACTS LV	HD	COIL RESIST.	WORKING CURRENT	SHELF MOUNT	FRONT SERVICE	RACK MOUNT	RES. 1000 Ohm	SECONDS PU @ V	RELAY CAT. NO.	PLUG COUPLER CAT. NO.
2		250		X					T5-430	T5-730
2				X			X		T5-431	T5-731
2					X				T5-432	T5-830
2					X		X		T5-433	T5-831
2						X			T5-434	T5-887
2						X	X		T5-435	T5-887
4		250		X					T5-436	T5-732
4				X			X	1.3 @ 10	T5-437	T5-733
4					X			.9 @ 12	T5-438	T5-832
4					X		X	.55 @ 16	T5-439	T5-833
4						X			T5-440	T5-887
4						X	X		T5-441	T5-887

TRANSCO PD1 ORDINARY ACTING BIASED D.C. TRACK RELAYS

FB CONTACTS LV	FB CONTACTS HD	COIL RESIST.	WORKING CURRENT	SHELF MOUNT	FRONT SERVICE	RACK MOUNT	REMARKS	RELAY CAT. NO.	PLUG COUPLER CAT. NO.
4		2.0		X				T5-450	T5-734
4					X			T5-451	T5-834
4						X		T5-452	T5-889
2	2	2.0		X				T5-453	T5-735
2	2				X			T5-454	T5-835
2	2					X		T5-455	T5-889
	4	2.0		X				T5-456	T5-736
	4				X			T5-457	T5-836
	4					X		T5-458	T5-889
6		2.0		X				T5-459	T5-737
6					X			T5-460	T5-837
6						X		T5-461	T5-889
4	2	2.0		X				T5-462	T5-738
4	2				X			T5-463	T5-838
4	2					X		T5-464	T5-889
	6	2.0		X				T5-465	T5-739
	6				X			T5-466	T5-839
	6					X		T5-467	T5-889

TRANSCO PD1 ORDINARY ACTING BIASED D.C. LINE RELAYS

FB CONTACTS LV	FB CONTACTS HD	COIL RESIST.	WORKING CURRENT	SHELF MOUNT	FRONT SERVICE	RACK MOUNT	RES. 2000 Ohm	REMARKS	RELAY CAT. NO.	PLUG COUPLER CAT. NO.
4		500		X					T5-480	T5-740
4				X			X		T5-481	T5-741
4					X				T5-482	T5-840
4					X		X		T5-483	T5-841
4						X			T5-484	T5-890
4						X	X		T5-485	T5-890
2	2	500		X					T5-486	T5-742
2	2			X			X		T5-487	T5-743
2	2				X				T5-488	T5-842
2	2				X		X		T5-489	T5-843
2	2					X			T5-490	T5-890
2	2					X	X		T5-491	T5-890
	4	500		X					T5-492	T5-744
	4			X			X		T5-493	T5-745
	4				X				T5-494	T5-844
	4				X		X		T5-495	T5-845
	4					X			T5-496	T5-890
	4					X	X		T5-497	T5-890
6		500		X					T5-498	T5-746
6				X			X		T5-499	T5-747
6					X				T5-500	T5-846
6					X		X		T5-501	T5-847
6						X			T5-502	T5-890
6						X	X		T5-503	T5-890
4	2	500		X					T5-504	T5-748
4	2			X			X		T5-505	T5-749
4	2				X				T5-506	T5-848
4	2				X		X		T5-507	T5-849
4	2					X			T5-508	T5-890
4	2					X	X		T5-509	T5-890

TRANSCO PD1 ORDINARY ACTING BIASED D.C. LINE RELAYS

FB CONTACTS LV	HD	COIL RESIST.	WORKING CURRENT	SHELF MOUNT	FRONT SERVICE	RACK MOUNT	RES. 2000 Ohm	REMARKS	RELAY CAT. NO.	PLUG COUPLER CAT. NO.
	6	500		X					T5-510	T5-750
	6			X			X		T5-511	T5-751
	6				X				T5-512	T5-850
	6				X		X		T5-513	T5-851
	6					X			T5-514	T5-890
	6					X	X		T5-515	T5-890

TRANSCO PD1 SLOW RELEASE BIASED D.C. LINE RELAYS

FB CONTACTS LV	FB CONTACTS HD	COIL RESIST.	WORKING CURRENT	SHELF MOUNT	FRONT SERVICE	RACK MOUNT	RES. 1000 Ohm	SECONDS DA @ V	RELAY CAT. NO.	PLUG COUPLER CAT. NO.
4		250		X					T5-540	T5-752
4				X			X		T5-541	T5-753
4					X				T5-542	T5-852
4					X		X		T5-543	T5-853
4						X			T5-544	T5-891
4						X	X		T5-545	T5-891
2	2	250		X					T5-546	T5-754
2	2			X			X		T5-547	T5-755
2	2				X				T5-548	T5-854
2	2				X		X		T5-549	T5-855
2	2					X			T5-550	T5-891
2	2					X	X		T5-551	T5-891
	4	250		X					T5-552	T5-756
	4			X			X		T5-553	T5-757
	4				X				T5-554	T5-856
	4				X		X		T5-555	T5-857
	4					X			T5-556	T5-891
	4					X	X		T5-557	T5-891
6		250		X					T5-558	T5-758
6				X			X		T5-559	T5-759
6					X				T5-560	T5-858
6					X		X		T5-561	T5-859
6						X			T5-562	T5-891
6						X	X		T5-563	T5-891
4	2	250		X					T5-564	T5-760
4	2			X			X		T5-565	T5-761
4	2				X				T5-566	T5-860
4	2				X		X		T5-567	T5-861
4	2					X			T5-568	T5-891
4	2					X	X		T5-569	T5-891

TRANSCO PD1 SLOW RELEASE BIASED D.C. LINE RELAYS

FB CONTACTS LV	HD	COIL RESIST.	WORKING CURRENT	SHELF MOUNT	FRONT SERVICE	RACK MOUNT	RES. 1000 Ohm	SECONDS DA @ V	RELAY CAT. NO.	PLUG COUPLER CAT. NO.
	6	250		X					T5-570	T5-762
	6			X			X		T5-571	T5-763
	6				X				T5-572	T5-862
	6				X		X		T5-573	T5-863
	6					X			T5-574	T5-891
	6					X	X		T5-575	T5-891

TRANSCO PD1 SLOW PICK-UP BIASED D.C. LINE RELAYS

FB CONTACTS LV	HD	COIL RESIST.	WORKING CURRENT	SHELF MOUNT	FRONT SERVICE	RACK MOUNT	RES. 1000 Ohm	SECONDS PU @ V	RELAY CAT. NO.	PLUG COUPLER CAT. NO.
2		250		X					T5-590	T5-764
2				X			X		T5-591	T5-765
2					X				T5-592	T5-864
2					X		X		T5-593	T5-865
2						X			T5-594	T5-892
2						X	X		T5-595	T5-892
4		250		X					T5-596	T5-766
4				X			X		T5-597	T5-767
4					X				T5-598	T5-866
4					X		X		T5-599	T5-867
4						X			T5-600	T5-892
4						X	X		T5-601	T5-892

TRANSCO PD1P POWER TRANSFER RELAYS

FB CONTACTS HD	COIL RESIST.	RECOMMENDED OPER. VOLTS	SHELF MOUNT	FRONT SERVICE	RACK MOUNT	REMARKS	RELAY CAT. NO.	PLUG COUPLER CAT. NO.
2		10 V. a.c.	X				T5-610	T5-768
2				X			T5-611	T5-868
2					X		T5-612	T5-894
4		10 V. a.c.	X				T5-613	T5-769
4				X			T5-614	T5-869
4					X		T5-615	T5-894

TRANSCO PD1L LIGHT OUT RELAYS

FB CONTACTS LV	COIL RESIST.	FOR USE WITH LAMPS	SHELF MOUNT	FRONT SERVICE	RACK MOUNT	REMARKS	RELAY CAT. NO.	PLUG COUPLER CAT. NO.
2	0.15	10 v 18w	X				T5-630	T5-770
2				X			T5-631	T5-870
2					X		T5-632	T5-895
4	0.15	10 v 18w	X				T5-633	T5-771
4				X			T5-634	T5-871
4					X		T5-635	T5-895

TRANSCO PD1F FLASHER RELAYS

FB CONTACTS HD	COIL RESIST.	RECOMMEND OPER. VOLT.	SHELF MOUNT	FRONT SERVICE	RACK MOUNT	FLASHES/MIN	RELAY CAT. NO.	PLUG COUPLER CAT. NO.
4			X			38 to 44	T5-640	T5-772
4				X			T5-641	T5-872
4					X		T5-642	T5-896

DESCRIPTION	CATALOG NO.
Electronic Control Unit for use with PD1F Relay	T5-648
Plug-in Base for Electronic Control Unit, above	T5-649

TRANSCO PD-1MS
MAGNETIC STICK RELAY

FB CONTACTS S - SIC	COIL RESISTANCE OHM	RECOMMEND. OPER. VOLT V	SHELF MOUNT	FRONT SERVICE	RACK MOUNT	RELAY CAT. NO.	PLUG COUPLER CAT. NO.
4N - 4R	250/250	12.0	X			T5-650	
4N - 4R	250/250	12.0		X		T5-651	
4N - 4R	250/250	12.0			X	T5-652	

PLUG COUPLERS AND PLATFORMS FOR SHELF MOUNT OF TRANSCO PD1 RELAYS

PD1 Relays can be used as shelf relays without plug couplers, if desired. The plug couplers listed below applied to the relays provide the advantage of permitting two wires on each contact and also the advantage of replacing a relay without disconnecting any wires. The plug couplers are indexed to each relay so that a relay cannot be replaced with another of different contact arrangement, type or operating characteristics.

RELAY CAT. NO.	PLUG COUPLER CAT. NO.	RELAY CAT. NO.	PLUG COUPLER CAT. NO.
T5-300	T5-700	T5-430	T5-730
T5-303	T5-701	T5-431	T5-731
T5-306	T5-702	T5-436	T5-732
T5-309	T5-703	T5-437	T5-733
T5-312	T5-704	T5-450	T5-734
T5-315	T5-705	T5-453	T5-735
T5-330	T5-706	T5-456	T5-736
T5-331	T5-707	T5-459	T5-737
T5-336	T5-708	T5-462	T5-738
T5-337	T5-709	T5-465	T5-739
T5-342	T5-710	T5-480	T5-740
T5-343	T5-711	T5-481	T5-741
T5-348	T5-712	T5-486	T5-742
T5-349	T5-713	T5-487	T5-743
T5-354	T5-714	T5-492	T5-744
T5-355	T5-715	T5-493	T5-745
T5-360	T5-716	T5-498	T5-746
T5-361	T5-717	T5-499	T5-747
T5-380	T5-718	T5-504	T5-748
T5-381	T5-719	T5-505	T5-749
T5-386	T5-720	T5-510	T5-750
T5-387	T5-721	T5-511	T5-751
T5-392	T5-722	T5-540	T5-752
T5-393	T5-723	T5-541	T5-753
T5-398	T5-724	T5-546	T5-754
T5-399	T5-725	T5-547	T5-755
T5-404	T5-726	T5-552	T5-756
T5-405	T5-727	T5-553	T5-757
T5-410	T5-728	T5-558	T5-758
T5-411	T5-729	T5-559	T5-759

PLUG COUPLERS AND SLIDE BRACKETS FOR FRONT SERVICE MOUNT OF TRANSCO PD1 RELAYS

When PD1 Relays are wall or rack mounted for servicing from the front, slide brackets must be ordered or plug couplers and slide brackets. For plug coupler replacement, plug coupler only may be ordered.

RELAY CAT. NO.	PLUG COUPLER ONLY CAT. NO.	SLIDE BRACKET AND PLUG COUPLER CAT. NO.	RELAY CAT. NO.	PLUG COUPLER ONLY CAT. NO.	SLIDE BRACKET AND PLUG COUPLER CAT. NO.
T5-301	T5-700	T5-800	T5-439	T5-733	T5-833
T5-304	T5-701	T5-801	T5-451	T5-734	T5-834
T5-307	T5-702	T5-802	T5-454	T5-735	T5-835
T5-310	T5-703	T5-803	T5-457	T5-736	T5-836
T5-313	T5-704	T5-804	T5-460	T5-737	T5-837
T5-316	T5-705	T5-805	T5-463	T5-738	T5-838
T5-332	T5-706	T5-806	T5-466	T5-739	T5-839
T5-333	T5-707	T5-807	T5-482	T5-740	T5-840
T5-338	T5-708	T5-808	T5-483	T5-741	T5-841
T5-339	T5-709	T5-809	T5-488	T5-742	T5-842
T5-344	T5-710	T5-810	T5-489	T5-743	T5-843
T5-345	T5-711	T5-811	T5-494	T5-744	T5-844
T5-350	T5-712	T5-812	T5-495	T5-745	T5-845
T5-351	T5-713	T5-813	T5-500	T5-746	T5-846
T5-356	T5-714	T5-814	T5-501	T5-747	T5-847
T5-357	T5-715	T5-815	T5-506	T5-748	T5-848
T5-362	T5-716	T5-816	T5-507	T5-749	T5-849
T5-363	T5-717	T5-817	T5-512	T5-750	T5-850
T5-382	T5-718	T5-818	T5-513	T5-751	T5-851
T5-383	T5-719	T5-819	T5-542	T5-752	T5-852
T5-388	T5-720	T5-820	T5-543	T5-753	T5-853
T5-389	T5-721	T5-821	T5-548	T5-754	T5-854
T5-394	T5-722	T5-822	T5-549	T5-755	T5-855
T5-395	T5-723	T5-823	T5-554	T5-756	T5-856
T5-400	T5-724	T5-824	T5-555	T5-757	T5-857
T5-401	T5-725	T5-825	T5-560	T5-758	T5-858
T5-406	T5-726	T5-826	T5-561	T5-759	T5-859
T5-407	T5-727	T5-827	T5-566	T5-760	T5-860
T5-412	T5-728	T5-828	T5-567	T5-761	T5-861
T5-413	T5-729	T5-829	T5-572	T5-762	T5-862
T5-432	T5-730	T5-830	T5-573	T5-763	T5-863
T5-433	T5-731	T5-831	T5-592	T5-764	T5-864
T5-438	T5-732	T5-832	T5-593	T5-765	T5-865

PLUG COUPLERS AND PLATFORMS

RELAY CAT. NO.	PLUG COUPLER CAT. NO.	RELAY CAT. NO.	PLUG COUPLER CAT. NO.
T5-564	T5-760		
T5-565	T5-761		
T5-570	T5-762		
T5-571	T5-763		
T5-590	T5-764		
T5-591	T5-765		
T5-596	T5-766		
T5-597	T5-767		
T5-610	T5-768		
T5-613	T5-769		
T5-630	T5-770		
T5-633	T5-771		
T5-640	T5-772		

DESCRIPTION	CATALOG NO.
Shock Absorber Platform for Shelf Mounting Style PD1 Relays.	T5-799

PLUG COUPLERS AND SLIDE BRACKETS FOR FRONT SERVICE MOUNT OF TRANSCO PD1 RELAYS

RELAY CAT. NO.	PLUG COUPLER ONLY CAT. NO.	SLIDE BRACKET AND PLUG COUPLER CAT. NO.
T5-598	T5-766	T5-866
T5-599	T5-767	T5-867
T5-611	T5-768	T5-868
T5-614	T5-769	T5-869
T5-631	T5-770	T5-870
T5-634	T5-771	T5-871
T5-641	T5-772	T5-872
	T5-773	T5-873

DESCRIPTION	CATALOG NO.
Slide Bracket for PD1 Relay. For front servicing of relay, wall or rack mounted.	T5-899

VIEW UNLOCKED

VIEW LOCKED

STYLE CI AC TIME DELAY RELAY

A synchronous, highly accurate low cost device which fulfills all AAR requirements. Adjustable in 1 sec. increments from 0 sec. to 5 min.

Transcontrol Corporation

2 YENNICOCK AVE., PORT WASHINGTON, N. Y.
Phone: POrt Washington 7-4500

TRANSCO STYLE C1 TIME DELAY RELAY

DESCRIPTION OF OPERATION

THE TRANSCO STYLE C1 TIME DELAY RELAY IS A SYNCHRONOUS MOTOR DRIVEN DEVICE WHICH OPERATES ITS CONTACTS CLOSED AFTER AN ADJUSTABLE TIME INTERVAL.

AN ADJUSTABLE DIAL WITH LOCKING ARRANGEMENT IS PROVIDED TO ADJUST AND SET THE TIME. THE INSTRUMENT CAN BE SET FOR A TIME INTERVAL AS LOW AS A FEW SECONDS UP TO A MAXIMUM OF 5 MINUTES.

ONE CHECKING CONTACT AND ONE TIME CONTACT ARE PROVIDED. THESE CONTACTS ARE SILVER TO SILVER IMPREGNATED CARBON WITH STANDARD A.A.R. CLEARANCES.

CONTACT RATING IS 10 AMPERES NON-INDUCTIVE LOAD.

OPERATING VOLTAGE IS 110 VOLTS 60 CYCLES. A 100 CYCLE RELAY CAN BE PROVIDED ON REQUEST.

THE RELAY IS ARRANGED FOR EITHER SHELF OR WALL TYPE MOUNTING. IT IS MOUNTED ON THE SAME SHOCK ABSORBER PLATFORM WHICH IS USED FOR TRANSCO STYLE A1 FOUR POINT RELAY.

WIRING DIAGRAM

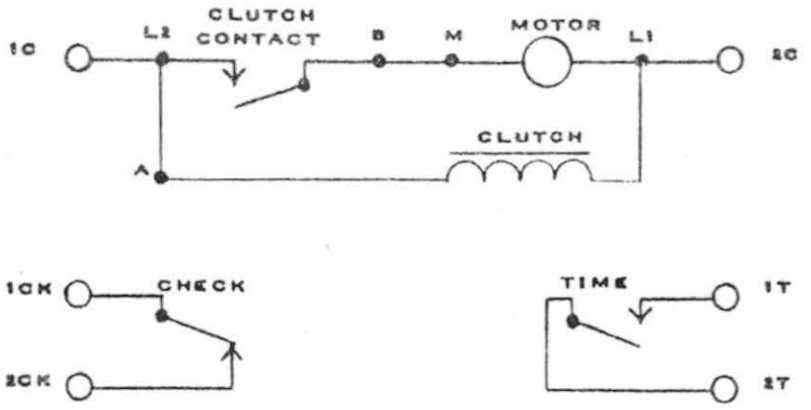

WHEN ENERGY IS APPLIED TO TERMINALS 1C AND 2C OF THE STYLE C1 TIME ELEMENT RELAY THE CLUTCH CONTACT CLOSES AND THE CHECK CONTACT OPENS. AT THE END OF THE SET TIME CONTACT CLOSES.

IF THE ENERGY IS INTERRUPTED BEFORE THE END OF THE TIME INTERVAL THE TIME ELEMENT RELAY RESETS TO THE ZERO OR STARTING POSITION.

TRANSCONTROL CORPORATION
PORT WASHINGTON, N. Y.

SK 179 8-23-61

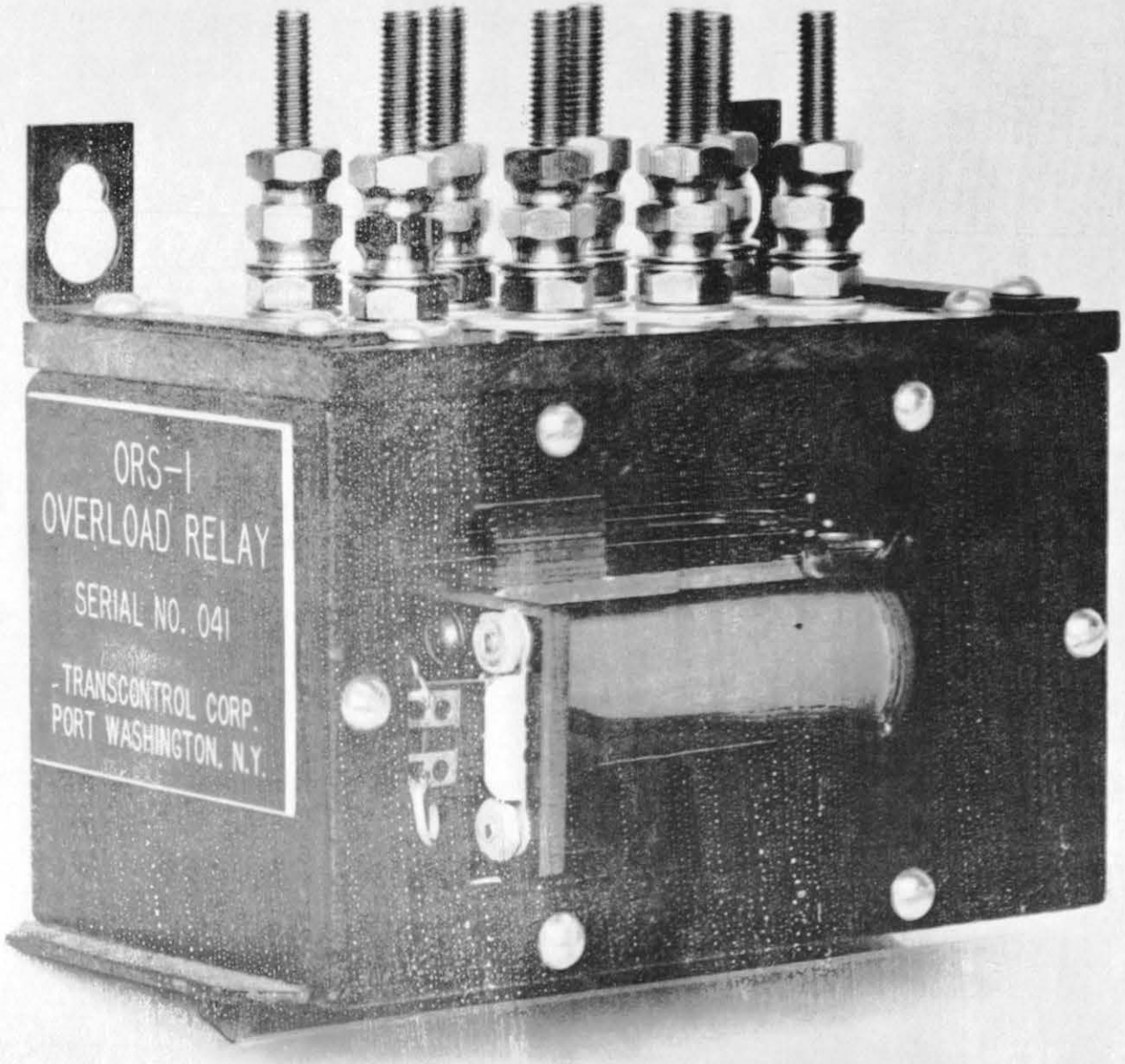

ORSI OVERLOAD RELAY

ORS-1 OVERLOAD RELAY

WITH PLUG COUPLER

TRANSCONTROL CORP.
PORT WASHINGTON, N.Y. 11050

TRANSCO ORS1 SWITCH OVERLOAD RELAYS

FB CONTACTS	RESIST.	DC OR AC	FOR CLUTCH TO SLIP SECONDS	AMPERES	VOLTAGE	CATALOG NO.
2 make before break						T5-197

TRANSCONTROL CORP.
PORT WASHINGTON, N.Y. 11050

STYLE AT-1 CODE TRANSMITTER

(FRONT VIEW)

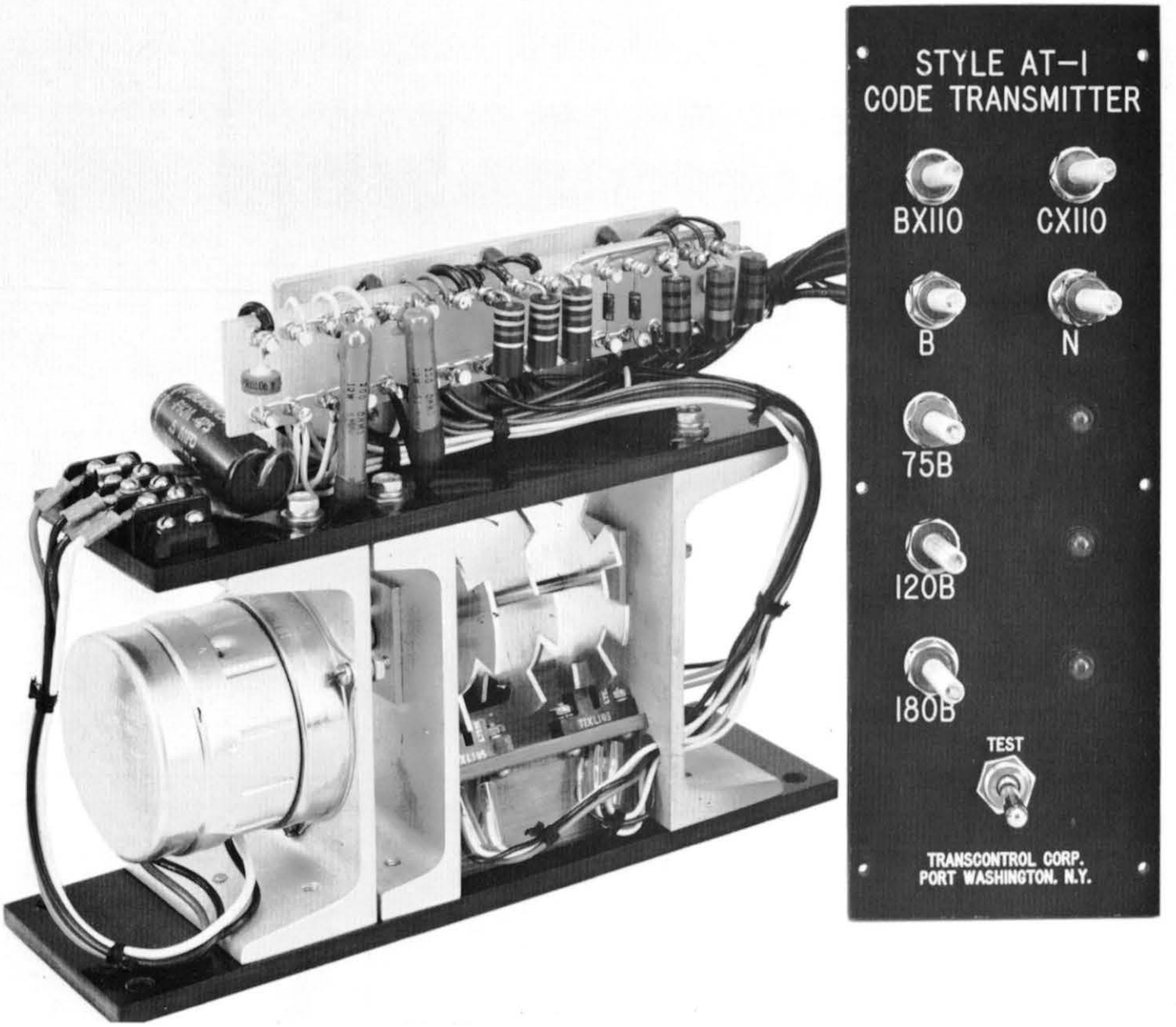

STYLE AT-1 CODE TRANSMITTER

(WITHOUT CASE)

TRANSCONTROL CORP.
PORT WASHINGTON, N.Y. 11050

CONTACT GROUPS FOR GRS TYPE B RELAYS

TRANSCO ORDERING REFERENCES

DWG. AA110 REF.	CONTACT COMBINATION	CONTACT MATERIAL FRONT	CONTACT MATERIAL BACK	GRS ORDERING REF.	TRANSCO ORDERING REF.	TRANSCO PRICE
A	2FB	C to M	M to M	P62-484	P62-484T	$ 9.50
B	"	C to M (HD)	M to M (HD)	P62-488	P62-488T	$10.50
C	"	M to M	M to M	P62-487	P62-487T	$10.50
D	"	(M to M (upper)	M to M	P62-486	P62-486T	$10.50
		(C to M (lower)	M to M			
E	"	M to M (HD)	M to M (HD)	P62-500	P62-500T	$10.50
F	2F-1B	C to M	M to M	P62-479	P62-479T	$ 9.50
G	"	C to M (HD)	M to M (HD)	P62-480	P62-480T	$ 9.50
H	1F-2B	C to M	M to M	P62-482	P62-482T	$ 9.50
J	"	M to M	M to M	P62-483	P62-483T	$ 9.50
K	2B		M to M	P62-495	P62-495T	$ 8.50
M	1F-1B	M to M (EHD)	M to M (EHD)	P62-494	P62-494T	$12.00
N	3B		M to M	P62-481	P62-481T	$ 9.50
P	2F	M to M		P62-489	P62-489T	$ 7.50
Q	2NR	C to M	M to C	P62-485	P62-485T	$10.50

Legend - C to M = Metal-impregnated-carbon-to-metal
M to M = Metal-to-metal
HD = Heavy-duty
EHD = Extra heavy-duty, with magnetic blowouts

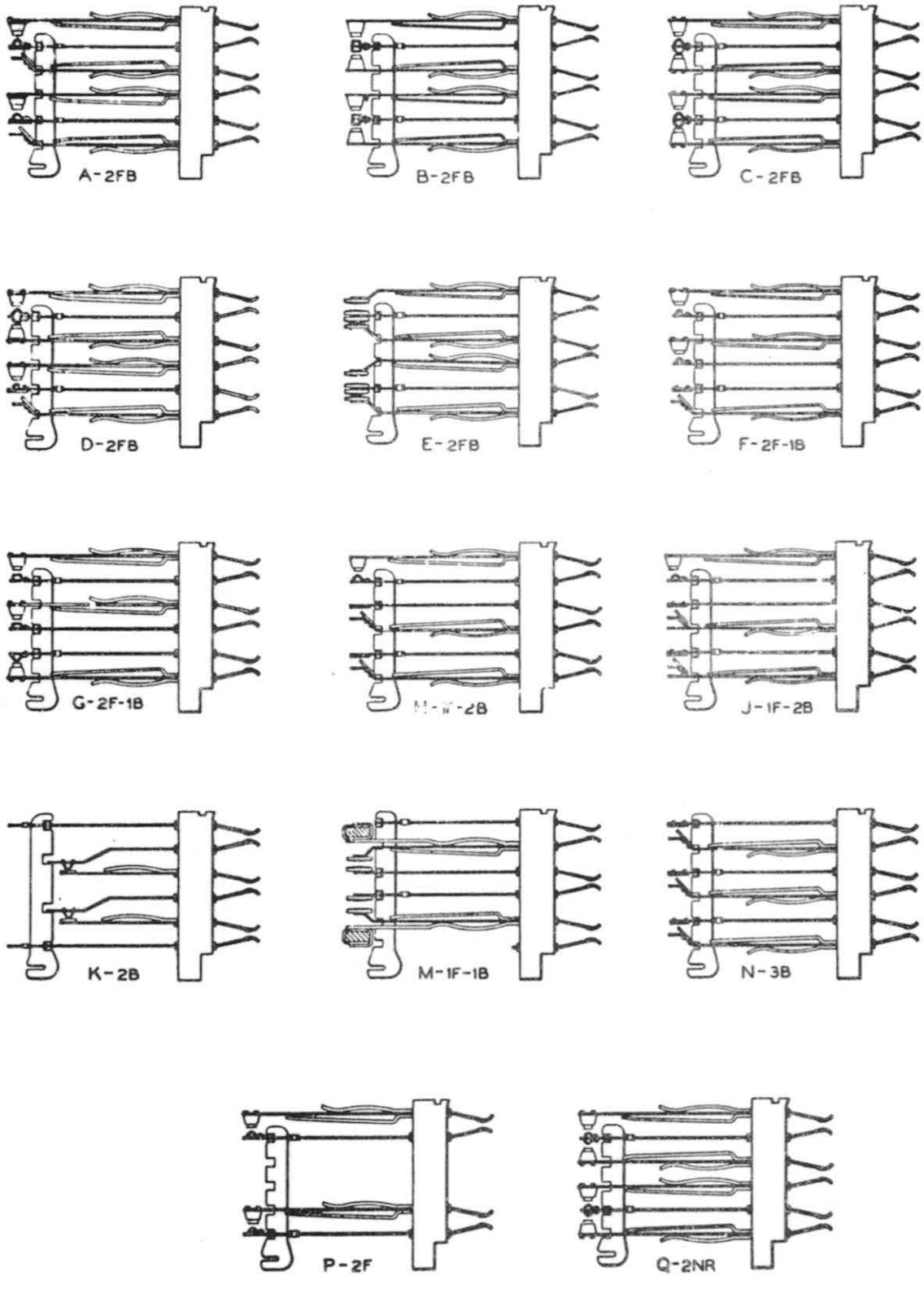

Contact groups.

CONTACT GROUPS FOR G. R. S. TYPE B RELAYS
TRANSCO ORDERING REFERENCES

TRANSCONTROL CORP. PORT WASHINGTON, N.Y.	DATE	DRAWING A110	SH. NO. 1

REPAIR PARTS FOR UNION STYLE

DN11, DN11B, DN11L, DN11P, DN18, DN19, DN22B & DN2P RELAYS

TRANSCO ORDERING REFERENCES

UNION ORDERING REFERENCE	DESCRIPTION	TRANSCO ORDERING REFERENCE	TRANSCO PRICE
UN184912	Coil, 1 ohm	184912T	$9.35
UN144439	Coil, 2 ohms	144439T	9.35
UN198487	Coil, 2 ohms Slow drop-away	198487T	9.35
UN156501	Coil, 8 ohms	156501T	9.35
UN214563	Coil, 15 ohms	214563T	9.35
UN179520	Coil, 20 ohms Slow drop-away	179520T	10.50
UN189122	Coil, 27.5 ohms	189122T	9.35
UN159678	Coil, 30 ohms	159678T	9.35
UN153693	Coil, 50 ohms	153693T	9.35
UN157893	Coil, 50 ohms Slow drop-away	157893T	10.50
UN138111	Coil, 125 ohms	138111T	9.35
UN157894	Coil, 125 ohms Slow drop-away	157894T	10.50
UN157895	Coil, 200 ohms Slow drop-away	157895T	10.50
UN153698	Coil, 250 ohms	153698T	9.35
UN157896	Coil, 250 ohms Slow drop-away	157896T	10.50
UN144561	Coil, 335 ohms	144561T	9.35
UN143067	Coil, 500 ohms	143067T	9.35
UN157897	Coil, 500 ohms Slow drop-away	157897T	9.35
UN156502	Coil, 750 ohms	156502T	9.35
UN147953	Coil, 1,000 ohms	147953T	9.35
UM168826	Washer	168826T	.02
UM184680	Coil Lock	184680T	.10
UM142640	Back Strap	142640T	2.00
UJ50036	Cap Screw, 5/16" x 3/4" hex head (Cad.Pl)	50036T	.05
UM69705	Washer	69705T	.03
UM29103	Nut	29103T	.03
UM142777	Tag (Marked +)	142777T	.03
UJ47818	Washer	47818T	.02
UM29101	Nut	29101T	.04
UJ47081	Gasket (4 point relays)	47081T	.25
UJ47144	Gasket (6 point relays)	47144T	.30
UJ47289	Gasket (8 point relays)	47289T	.35
UR333041	Foot	333041T	.60
UM267499	Nut	267499T	.03
UN172589	Shock Absorber (shelf type - 4 pt. relays)	172589T	1.50
UN172590	Shock Absorber (shelf type - 6 pt. relays)	172590T	2.00
UN172591	Shock absorber (shelf type - 8 pt. relays)	172591T	2.50
UM113978	Binding post (for coil lead)	113978T	.18
UM134516	Lock Washer	134516T	.02
UM151836	Nut	151836T	.04

UNION ORDERING REFERENCE	DESCRIPTION	TRANSCO ORDERING REFERENCE	TRANSCO PRICE
UN149211	Armature and Bracket Complete (4 point relays)	149211T	$11.00
UN142654	Armature and Bracket Complete (6 point relays)	142654T	$12.00
UN155487	Armature and Bracket Complete (8 point relays)	155487T	$13.00
UN149210	Armature	149210T	$ 6.50
UN142649	Armature	142649T	$ 6.50
UN155808	Armature	155808T	$ 7.50
UM195816	Bracket	195816T	$ 5.50
UM159814	Pivot Screw	159814T	$ .35
UM159815	Lock Washer	159815T	$ .02
UM195913	Screw	195913T	$ .06
UM185878	Washer	185878T	$ .02
UM57497	Dowel	57497T	$ .10
UM149076	Screw	149076T	$ .06
UM1506	Nut	1506T	$ .04
UM178251	Lock Washer	178251T	$ .02
UM150113	Spring Support	150113T	$ .35
UM149339	Washer	149339T	$ .02
UM142673	Screw	142673T	$ .08
UM150166	Screw	150166T	$ .06
UM150140	Washer	150140T	$ .02
UM34340	Ventilator	34340T	$ 2.00
UM145747	Washer (For quick acting relay)	145747T	$ .08
UM25107	Bushing (For quick acting relay)	25107T	$ .02
UN195911	Connector	195911T	$ .22
UM173276	Bracket (For wall mounting)	173276T	$ .70
UN149000	Base Assembly. Used for 4 point relays previous to 10/18/55	149000T	$ 6.00
UN142670	Base Assembly. Used for 6 point relays previous to 10/18/55	142670T	$ 8.00
UN142671	Base Assembly (8 point relays)	142671T	$10.00
UN149013	.Base Plate Complete	149013T	$ 2.50
UN142667	.Base Plate Complete	142667T	$ 3.50
UN142669	.Base Plate Complete	142669T	$ 5.50
UM34340	Ventilator	34340T	$ 2.00
UM108066	Collar	108066T	$ .10
UM131216	Corner Stud	131216T	$ .25
UM142633	Corner Stud	142633T	$ .25
UM131215	Supporting Stud	131215T	$ .12
UM145116	Supporting Stud	145116T	$ .12
UM142645	Glass Shield (side)	142645T	$ .10
UM142467	Glass Shield (side)	142467T	$ .10
UM145941	Glass Shield (side)	145941T	$ .10
UM149034	Gasket	149034T	$ .20
UM142636	Gasket	142636T	$ .20
UM142638	Gasket	142638T	$ .20
UN142653	Shield Support	142653T	$ .35

UNION ORDERING REFERENCE	DESCRIPTION	TRANSCO ORDERING REFERENCE	TRANSCO PRICE
UN161180	Center Post Complete. For 8 and 10 point relays, used on 4 and 6 point relays previous to 10/18/55.	161180T	$ .80
UM142644	Center Post	142644T	$ .35
UM142632	Bushing	142632T	$ .15
UM138213	Nut. For 8 and 10 point relays, used on 4 and 6 point relays previous to 10/18/55.	138213T	$ .12
UM131234	Binding Post	131234T	$ .35
UM142631	Binding Post	142631T	$ .35
UM131237	Binding Post	131237T	$ .35
UM233318	Binding Post	233318T	$ .35
UM231670	Binding Post	231670T	$ .35
UM152099	Binding Post	152099T	$ .35
UM29101	Nut	29101T	$ .04
UJ47818	Washer	47818T	$ .02
UM29103	Nut	29103T	$ .04
UM69705	Washer	69705T	$ .02
UM72948	Nut	72948T	$ .04
UM134516	Lock Washer	134516T	$ .02
UM62977	Screw	62977T	$ .04
UM52335	Washer	52335T	$ .02
UM410442	Nut	410442T	$ .20
UM131239	Screw	131239T	$ .07
UM233321	Lock Washer	233321T	$ .10
UM57996	Screw	57996T	$ .07
UM20686	Lock Washer	20686T	$ .10
UM151836	Nut	151836T	$ .05
UM173737	Lock Washer	173737T	$ .10
UM131245	Contact Holder	131245T	$ .25
UM134400	Lock Washer	134400T	$ .02
UM192829	Bracket	192829T	$ .40
UJ70940	Contact Tip (Silver Imp. Carbon) L.V.	70940T	$ .75
UN159125	Contact Tip (Silver) L.V.	159125T	$ 2.00
UM106290	Contact Tip (Silver Imp.Carbon) Heavy Duty	106290T	$ 1.30
UM168308	Contact Tip (Silver Imp./Carbon) H.V.	168308T	$ 1.10
UN142643	Non-Insulated Connector Complete (high or low voltage)	142643T	$ .18
UN341437	Insulated Connector Complete (high or low voltage) (Used in spaces 1 and 6 of 6 point relays having plastic case)	341437T	$ .20
UM142674	.Connector only	142674T	$ .10
UM152571	.Flexible Connector	152571T	$ .02
UM341421	.Insulation	341421T	$ .02
UN279518	Non-Insulated Connector Complete (Heavy Duty)	279518T	$ .60
UN341438	Insulated Connector Complete (Heavy Duty) (Used in spaces 1 and 6 of 6 point relays having plastic case)	341438T	$ .60

UNION ORDERING REFERENCE	DESCRIPTION	TRANSCO ORDERING REFERENCE	TRANSCO PRICE
UM137945	.Flexible Connector	137945T	$ .06
UM279381	.Plate	279381T	$ .12
UN131261	Left Hand Back Post with silver tip (low voltage)	131261T	$1.30
UN131262	Right Hand Back Post with silver tip (low voltage)	131262T	$1.30
UM192794	Left Hand Back Post with silver tip (heavy duty)	192794T	$3.00
UN192795	Right Hand Back Post with silver tip (heavy duty)	192795T	$3.00
UJ75510	White Tag (Orders should specify marking desired)	75510T	$ .04
UJ75519	Red Tag (Orders should specify marking desired)	75519T	$ .04
UM180975	Stop Spring	180975T	$ .10
UM156580	Stop Spring	156580T	$ .25
UM192830	Stop Spring	192830T	$ .25
UN180974	Contact Spring Complete (low voltage front and back)	180974T	$1.30
UN180973	.Contact Spring	180973T	$1.20
UN106289	Contact Spring, Silver Tip (heavy duty front)	106289T	$2.75
UN192792	Contact Spring (heavy duty back)	192792T	$1.80
UN180978	Contact Spring Complete (high voltage front and back)	180978T	$4.50
UN180980	Contact Spring Complete (high voltage front)	180980T	$3.00
UN212952	Contact Spring (low voltage back)	212952T	$1.50
UN150268	Contact Spring (low voltage front)	150268T	$1.50
UN176828	Contact Spring Complete (low voltage back)	176828T	$1.20
UN156582	.Contact Spring	156582T	$1.50

AFO EQUIPMENT

TRANSCO VOICE FREQUENCY LINE OVERLAY SYSTEM

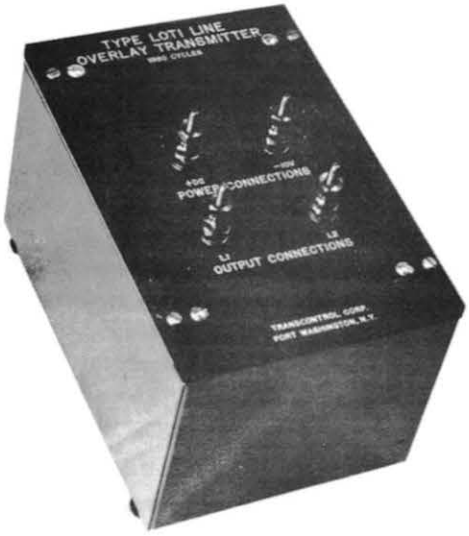

TYPE LOTI LINE TRANSMITTER

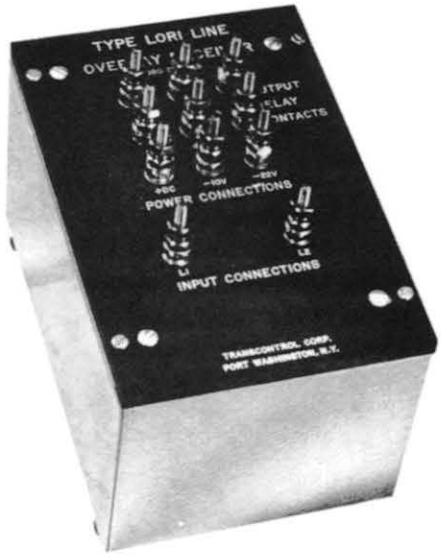

TYPE LORI LINE RECEIVER
(with built in OUTPUT RELAY)

TYPE LOCI LINE COUPLER

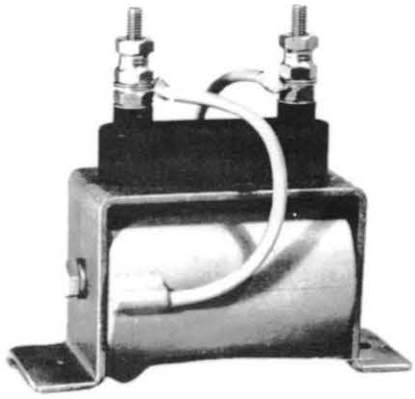

TYPE LOCHI CHOKE

SALIENT FEATURES

1. Available in 23 Frequencies from 420 to 3060 Cycles.
2. Transistorized Transmitter and Receiver.
3. Built in Coupler in Transmitter and Receiver.
4. Primary and Secondary of Coupling Transformer are Physically Separated. Withstand 10,000 Volt Breakdown Test.
5. Receiver Has Built In Output Relay, 2F-2B Contacts.
6. Built In Surge Protection.
7. Low Cost.

Transcontrol Corporation

2 YENNICOCK AVE., PORT WASHINGTON, N. Y.
Phone: POrt Washington 7-4500

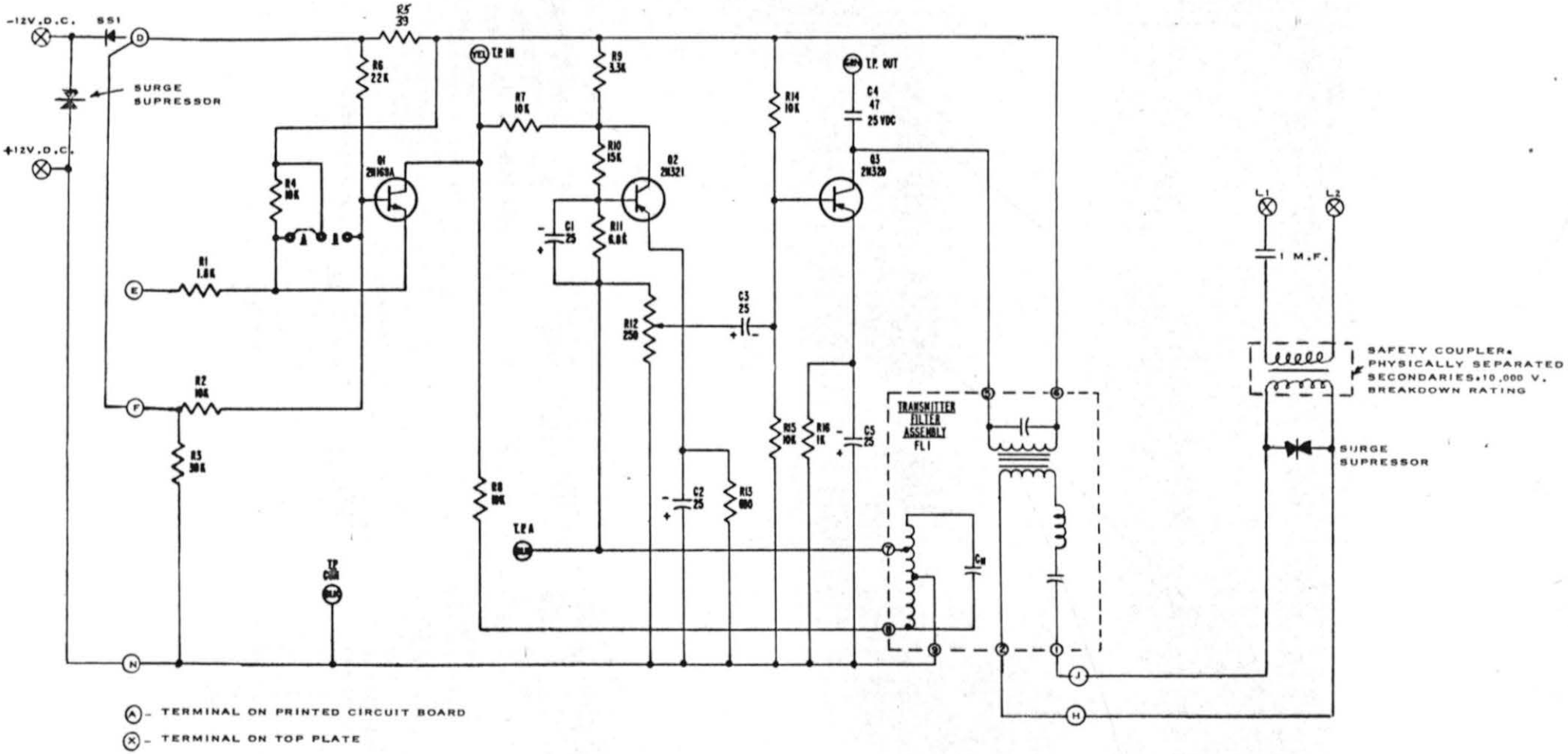

TYPE LOT1 LINE OVERLAY TRANSMITTE
CIRCUIT DIAGRAM

TRANSCONTROL CORP. PORT WASHINGTON, N.Y.	DATE 7-11-63	DRAWING B32	SH. NO. 1

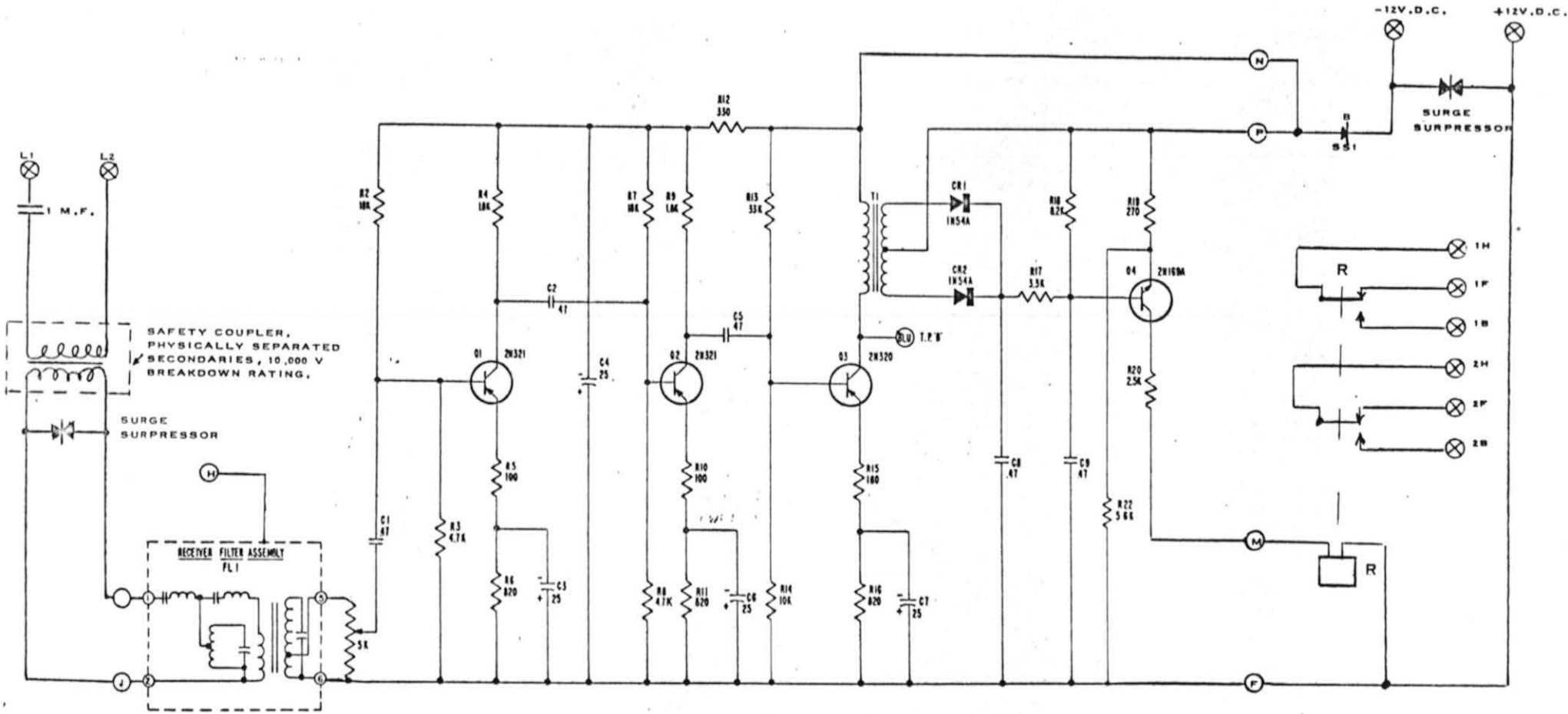

TYPE LOR1 LINE OVERLAY RECEIVER

CIRCUIT DIAGRAM

TRANSCONTROL CORP. PORT WASHINGTON, N.Y.	DATE 7-11-63	DRAWING B 3 2	SH. NO. 2

TRANSCO AFO EQUIPMENT

TRANSCO Line Overlay equipment is designed to operate from a 12 volt D. C. source. It may be used to overlay one or more channels of information on a line used for D. C. or slow code signaling. Coupling techniques in the equipment protect the safety of the signal pair from false battery feeds from the overlay equipment. The direct output from the overlay receiver may be used for non-vital functions such as indication or annunciation. If the input is coded by a conventional slow-code transmitter and the receiver output decoded by a conventional decoder, the signal may be considered vital, for use for additional aspects or release of approach locking. Often the saving of a pair of wires on a loaded pole line makes this practical.

Because of the lower line attenuation at lower frequencies, it is recommended that lower frequencies be used for longer distances and the higher frequencies be used for short distances. Depending on type of line, the expected operating distance can be about 10 to 25 miles for open line, and somewhat less for cable. If signals are being used in both directions, or if less than 13 frequencies are used in one direction, it is recommended that adjacent frequencies not be used.

One transmitter may be used to feed two or more receivers as may be required to divide the indication of a station to station block into two parts. Type LOC1 Line Couplers may be used to connect one D. C. signal pair to another D. C. signal pair for the audio frequencies only, with safety isolation maintained for the D. C. pairs. Type LOCH1 Chokes are used to keep the overlay signal from being shorted by a battery source. Relay coils appear as a high impedance to the overlay signal and need no protection.

Surge protection is built into both the transmitter and receiver.

The receiver has a built-in output relay with 2F-2B contacts.

TYPICAL APPLICATION

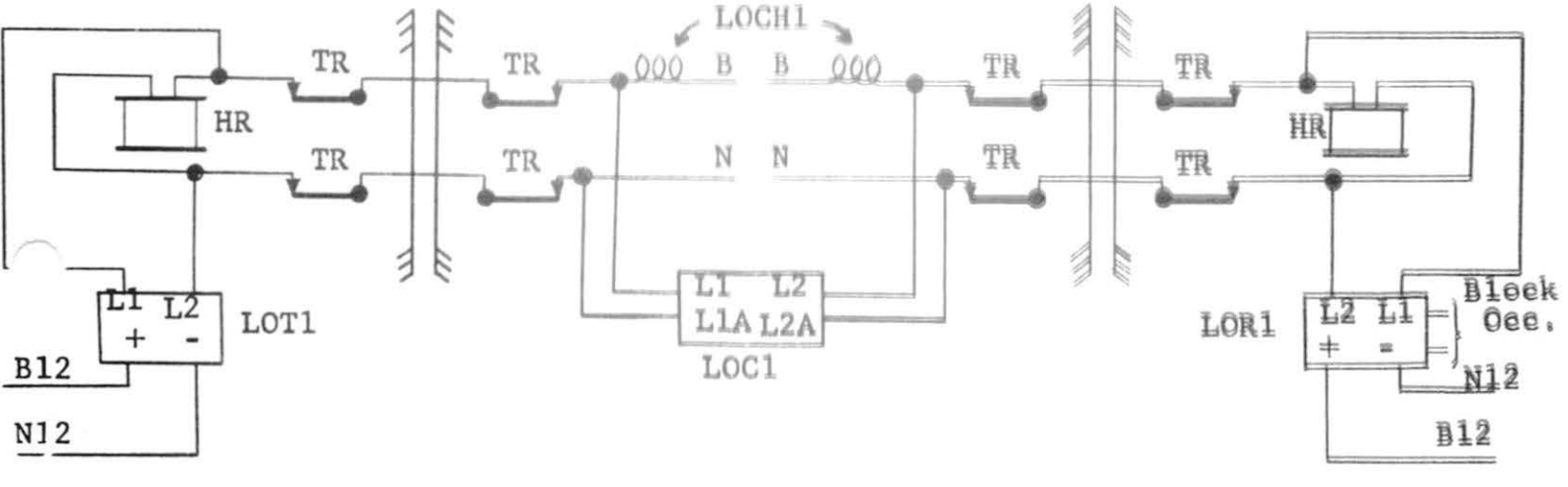

CATALOG SECTION 6

TRANSCO AFO EQUIPMENT

TYPE	Frequency	Catalog No.
LOT1 Line Transmitter	420 Hz.	T6-001
"	540 Hz.	T6-002
"	660 Hz.	T6-003
"	780 Hz.	T6-004
"	900 Hz.	T6-005
"	1020 Hz.	T6-006
"	1140 Hz.	T6-007
"	1260 Hz.	T6-008
"	1380 Hz.	T6-009
"	1500 Hz.	T6-010
"	1620 Hz.	T6-011
"	1740 Hz.	T6-012
"	1860 Hz.	T6-013
"	1980 Hz.	T6-014
"	2100 Hz.	T6-015
"	2220 Hz.	T6-016
"	2340 Hz.	T6-017
"	2460 Hz.	T6-018
"	2580 Hz.	T6-019
"	2700 Hz.	T6-020
"	2820 Hz.	T6-021
"	2940 Hz.	T6-022
"	3060 Hz.	T6-023
LOR1 Line Receiver	420 Hz.	T6-024
"	540 Hz,	T6-025
"	660 Hz.	T6-026
"	780 Hz.	T6-027
"	900 Hz.	T6-028

TRANSCO AFO EQUIPMENT

Type	Frequency	Catalog No.
LOR1 Line Receiver	1020 Hz.	T6-029
LOR1 Line Receiver	1140 Hz.	T6-030
"	1260 Hz.	T6-031
LOR1 Line Receiver	1380 Hz.	T6-032
"	1500 Hz.	T6-033
"	1620 Hz.	T6-034
"	1740 Hz.	T6-035
"	1860 Hz.	T6-036
"	1980 Hz.	T6-037
"	2100 Hz.	T6-038
"	2220 Hz.	T6-039
"	2340 Hz.	T6-040
"	2460 Hz.	T6-041
"	2580 Hz.	T6-042
"	2700 Hz.	T6-043
"	2820 Hz.	T6-044
"	2940 Hz.	T6-045
"	3060 Hz.	T6-046
LOC1 Line Coupler	A11	T6-047
LOCH1 Choke	A11	T6-048

POWER EQUIPMENT

Universal Transformer
Style PP and PP 10

Transcontrol A Siemens Company

Universal Transformer Style PP and PP 10

General Characteristics

Style PP and PP 10 Universal Transformer have two independent primaries, two identical sets of secondaries and adjustment windings, each rated at 9.0 A. Each secondary can be adjusted in 0.5 steps, for outputs between 0.5V and 22.5V, 60 Hz/100 Hz. Style PP and PP 10 Universal Transformer meets or exceeds all applicable AAR requirements.

Application

Style PP and PP 10 Universal Transformer can be used as:

- Lighting Transformer
- Rectifier Transformer
- Auto Transformer
- Track Transformer
  and other applications

Mechanical Characteristics

Style PP and PP 10 Universal Transformer are mounted inside a perforated metal can. The top plate indicates the arrangement of transformer windings and their corresponding voltages. The weight of the PP and PP 10 Universal Transformer is 20 lbs.

Style PP and PP 10 Universal Transformer can be wall, shelf, or rack mounted.

Style PP and PP 10 Universal Transformer differ only in the housing and mounting arrangement.

Electrical Characteristics

Input: 115/230V,
60 Hz/100 Hz
Output: 0.5-45.0V,
9.0A each secondary
Power Rating: 400 VA max.
Insulation: 3000 VRMS
winding to core and
winding to winding

PP

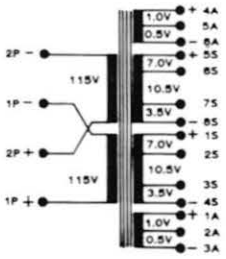

Circuit Diagram

Order Information

Style	Part No.
PP	98825044
PP 10	98825011

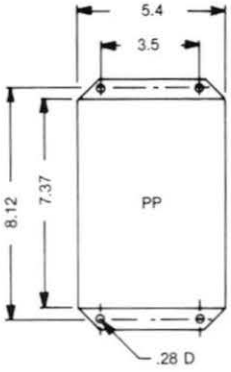

Front View

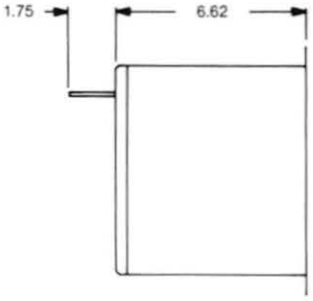

Side View

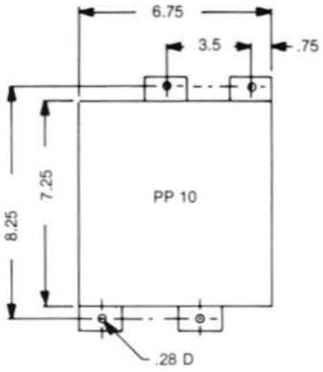

Front View

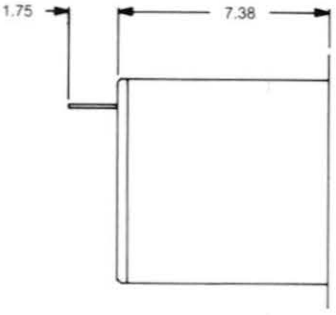

Side View

Issued by Transcontrol Corporation, A Siemens Company
75 Marcus Drive, Melville, New York 11747 (516) 249-6000 TX 645177

TRANSCO STYLE PP SIGNAL TRANSFORMER

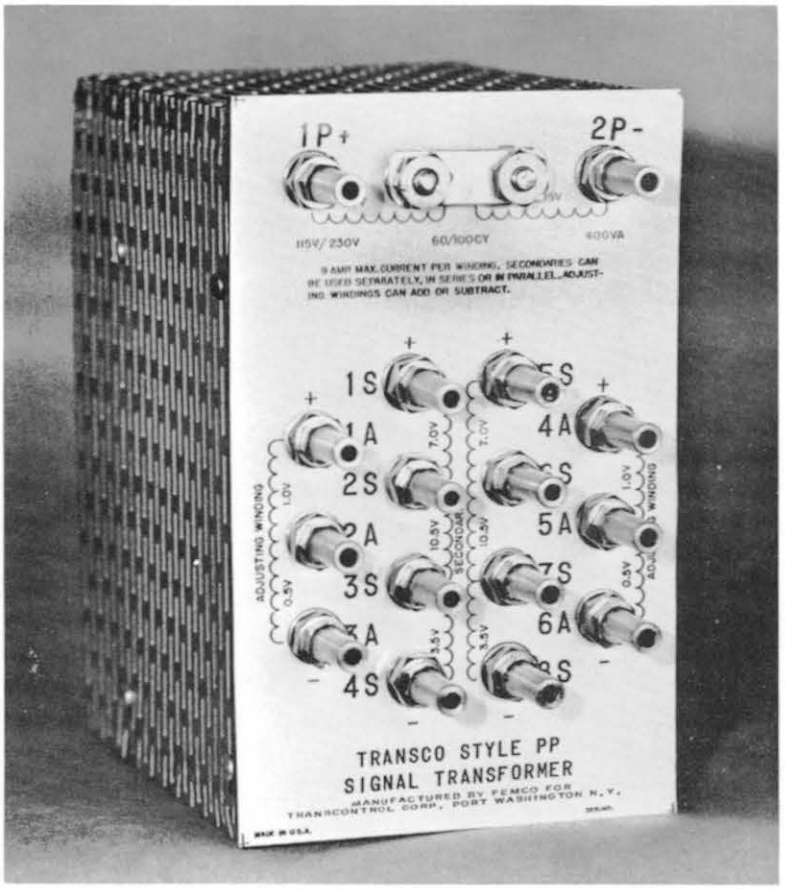

115/230 Volts 60/100 Cycles. 400 VA.

Two main secondaries, each having maximum current capacity of 9 amperes, adjustable in 0. 5 volt steps from 0. 5 volts to 22. 5 volts.

Meets AAR requirements in every respect.

Can be furnished with Hubbell AAR nuts, shown above or standard AAR nuts and washers.

Standard windings shown on top plate. Winding arrangement suitable for major portion of locations requiring track circuit and lighting power. Special windings can be furnished at slight extra cost.

Price $40. 00, F. 0. B. Irwin, Pa.

Transcontrol Corporation

2 YENNICOCK AVE., PORT WASHINGTON, N. Y.

Phone: POrt Washington 7-4500

TRANSCONTROL CORP.
PORT WASHINGTON, N.Y. 11050

115/230 V 60/100 Hz 400 VA

TWO MAIN SECONDARIES, EACH HAVING MAXIMUM CURRENT CAPACITY OF 9 AMPERS, ADJUSTABLE IN 0.5 VOLT STEPS FROM 0.5 VOLTS TO 22.5 VOLTS.

MEETS AAR REQUIREMENTS IN EVERY RESPECT.

DIMENSIONS $7\frac{3}{8}$ INCH LONG, $5\frac{3}{8}$ INCH WIDE, $6\frac{1}{4}$ INCH HIGH.

VOLTAGE OF WINDINGS SHOWN ON ENGRAVED TOP PLATE.

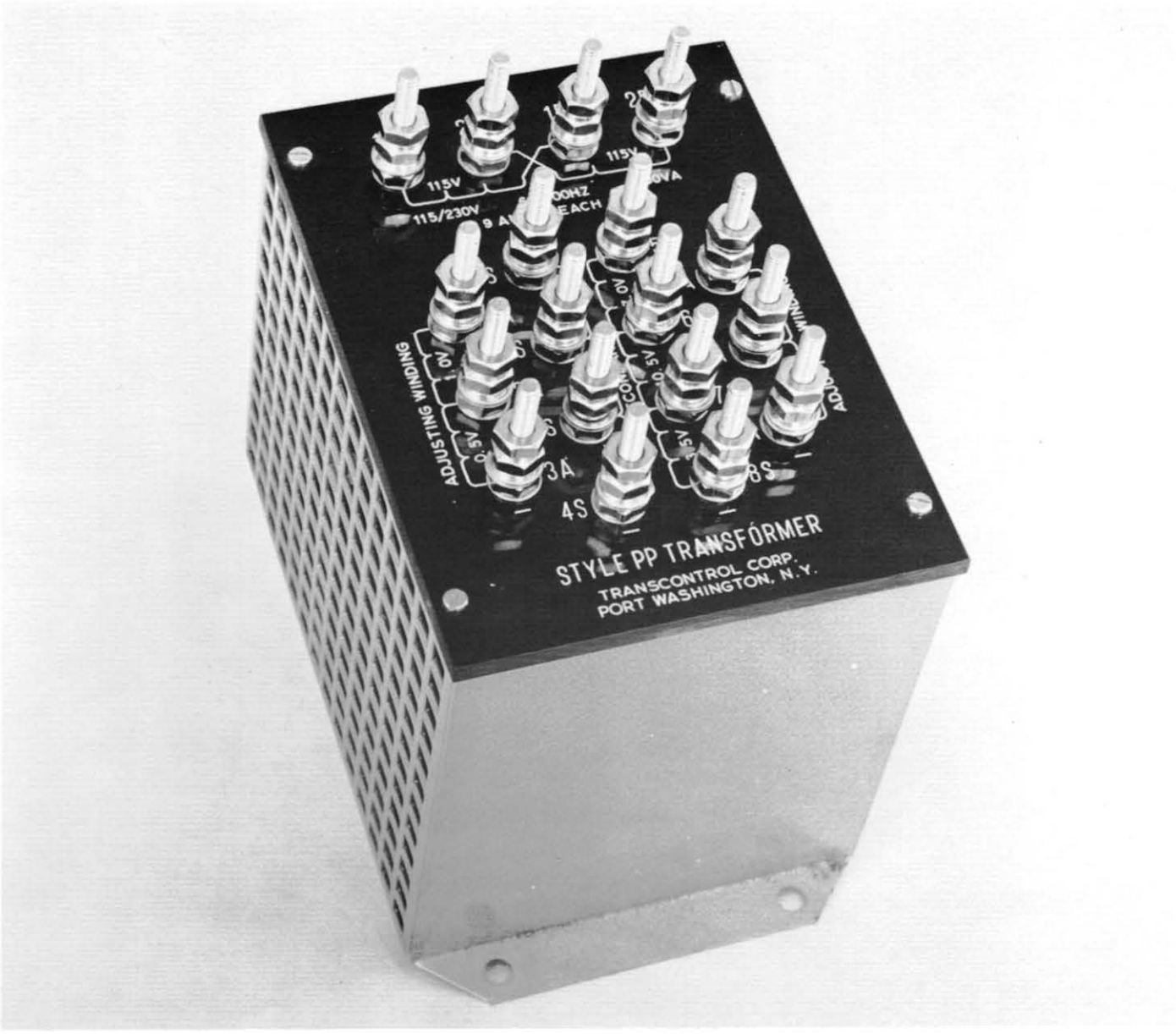

STYLE PP TRANSFORMER

TRANSCONTROL CORP.
PORT WASHINGTON, N.Y. 11050

115 V 60/100 Hz 200 VA

ONE MAIN SECONDARY, HAVING MAXIMUM CURRENT CAPACITY OF 9 AMPERS, ADJUSTABLE IN 0.5 VOLT STEPS FROM 0.5 VOLTS TO 22.5 VOLTS.

DIMENSIONS 6 INCH LONG, 6 INCH WIDE, $5\frac{1}{4}$ INCH HIGH

MEETS AAR REQUIREMENTS IN EVERY RESPECT

VOLTAGE OF WINDING SHOWN ON ENGRAVED TOP PLATE

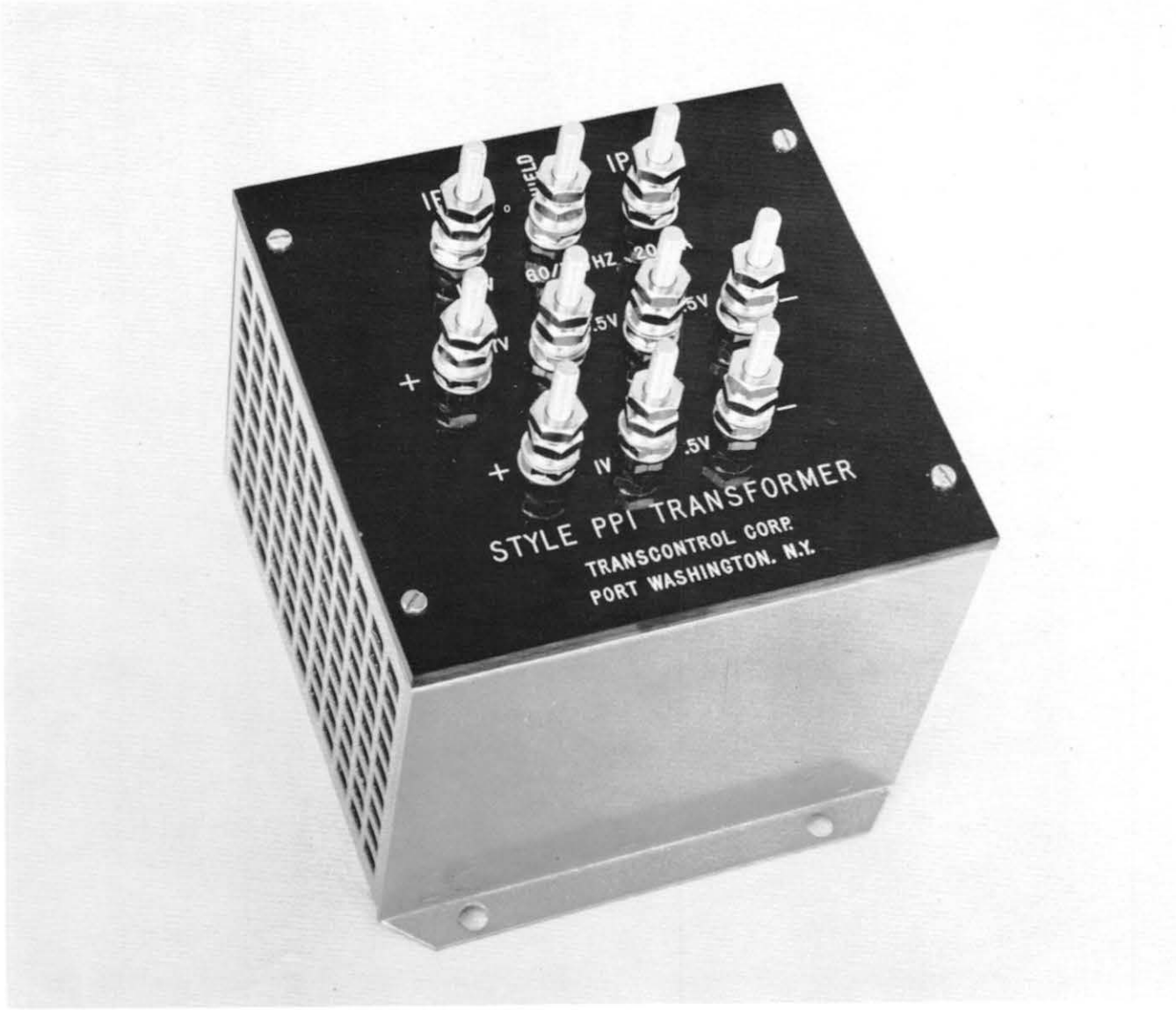

STYLE PP1 TRANSFORMER

STYLE DM2
STATIC PHASE SELECTIVE DEMODULATOR

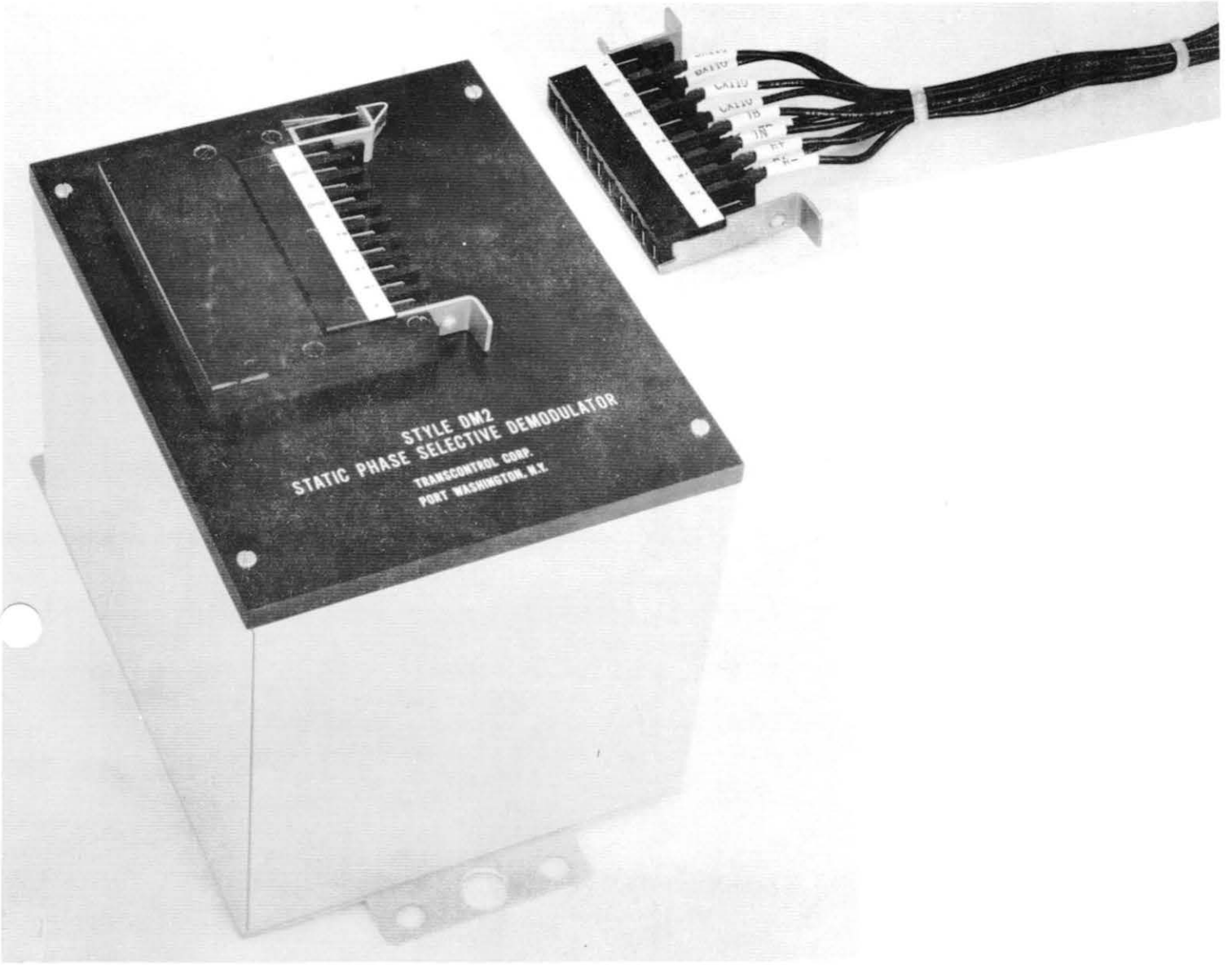

FOR USE ON CODED A.C. TRACK CIRCUITS WITH PD — 1 BIASED RELAY.

CAN BE FURNISHED FOR 25 HZ, 60 HZ, 100 HZ, OR AUDIO FREQUENCY TRACK CIRCUITS.

CAN BE USED IN LIEU OF, OR TO REPLACE VANE TYPE OR CENTRIFUGAL A.C. TRACK RELAYS.

STYLE DM2 UNIT IS ARRANGED FOR PLUG COUPLING. CIRCUIT SHOWN ON DWG. B243 SH. 1

Transcontrol Corporation

2 YENNICOCK AVE., PORT WASHINGTON, N.Y. 11050

TEL. 516 883 6900

Highway Crossing Power Pack HX-1

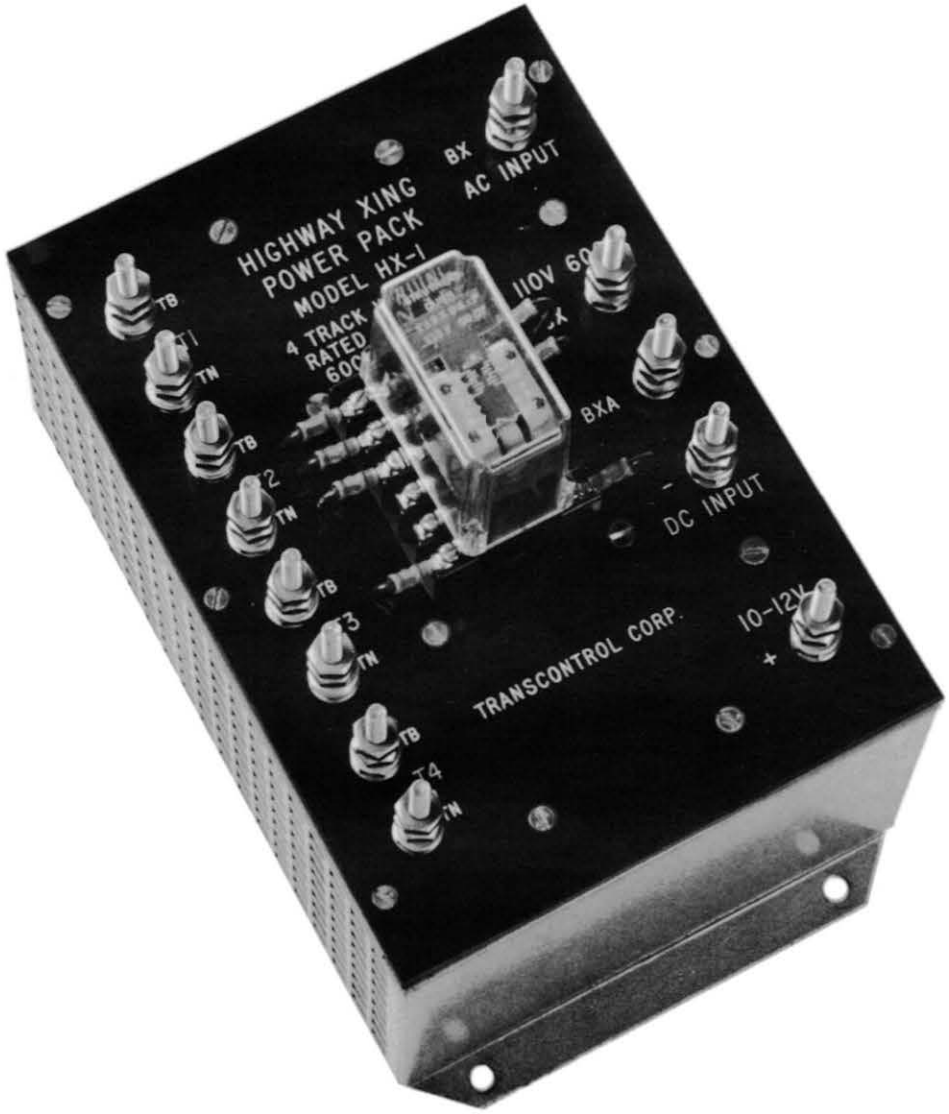

Transcontrol A Siemens Company

Highway Crossing Power Pack HX-1

The HX-1 power pack provides normal and standby power for up to 4 AC-DC (style C) track circuits. The package consists of a solid state DC to AC inverter, an output transformer with four secondaries and a power transfer relay.

The HX-1 has the following characteristics:

- Input voltage 110V AC and 10-12V DC, 110 VA
- Automatic transfer from 110V AC to standby DC
- Four secondaries rated at 6.3V, 3.5A, 100 VA rating
- 110V AC inverter output
- No adjustment necessary
- All components are packaged and interconnected in a single unit, and AAR terminals are provided for all external connections.

The HX-1 power pack provides power for 4 style "C" track circuits which are used in non-signalled and industrial railroad in particular to provide track occupancy detection where poor shunting exists.

Under normal conditions, the HX-1 is fed by 110V/60 Hz and the voltage is stepped down to 6.3V at each of the four secondaries. In the event that AC power fails, the incorporated power transfer relay would deenergize and allow the unit to operate with a 10-12V DC power source. The incorporated solid state inverter converts the DC energy into AC which operates the unit.

It should be noted that the total rating shall not exceed 100 VA.

Ordering Information

Style	Part No.
HX-1 Power Pack, complete	98605009
Replacement Parts:	
Track transformer for HX-1	25535000
Inverter transformer for HX-1	25530429
Power-transfer-relay for HX-1	87015378
Power transistor for HX-1	34525001
Diode, DC negative input for HX-1	34505078

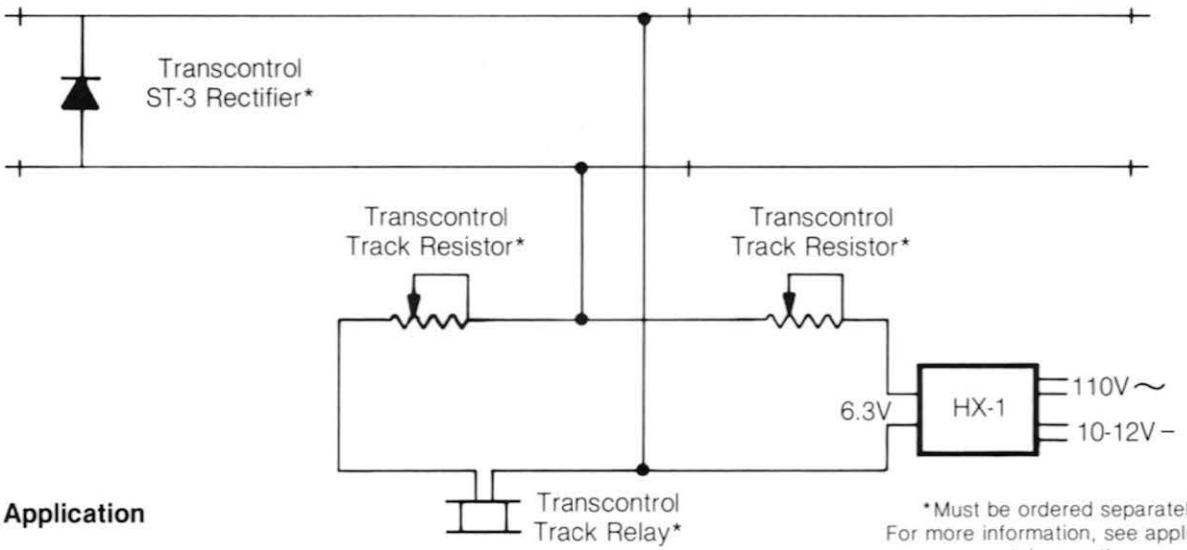

Typical Application

*Must be ordered separately. For more information, see applicable catalog section.

Issued by Transcontrol Corporation, A Siemens Company
75 Marcus Drive, Melville, New York 11747 (516) 249-6000 TX 645117

TRANSCONTROL CORP.
PORT WASHINGTON, N.Y. 11050

TYPE HX1
HIGHWAY CROSSING POWER PACK
FOR FURNISHING NORMAL AND STANDBY POWER FOR 4 A. C. - D. C. TRACK CIRCUITS

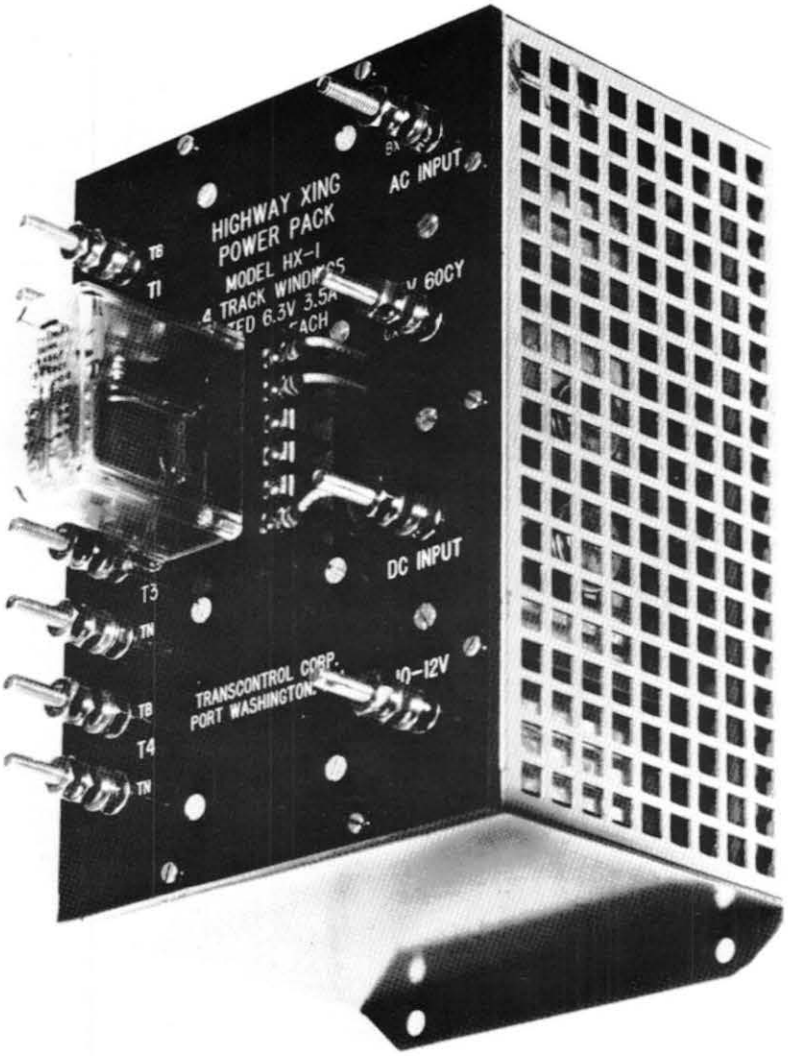

Package consists of Track Transformer with four secondaries each having a capacity of 6.3 Volts 3.5 Amps., Power Transfer Relay, and solid state Inverter of 100 VA capacity.

These components are interconnected in the package with AAR terminals on top for connections to 4 A.C. track feeds, 110 Volts A.C. and 12 Volts D.C. Power Supply.

TRANSCO HX1 POWER PACK

The TRANSCO HX1 Power Pack was designed to provide power for four A.C.-D.C. track circuits. A.C.-D.C. track circuits, also referred to as Style "C" track circuits, have advantages for use at highway crossing protection in non-signaled territory or for industrial protection systems. One advantage is that all power equipment, including all batteries, can be located at one area. Another advantage is the improved shunting afforded by this type of track circuit. Normally the power for the track circuits is supplied from the commercial 110 volt, 60 Hz. A.C. source, stepped down to 6.3 volt by each of the four secondaries in the HX1 Power Pack. In the event of A.C. power failure, a power off relay transfers the supply for the transformer to an internal inverter which operates from a 10 to 12 volt battery. The amount of standby time is determined by the circuit load and the size of the battery. Each of the four secondaries has a capacity of 6.3 volts, 3.5 amperes. The solid state inverter has a capacity of 100 va.

Combined and interwired in one unit are the components to perform the functions which normally require one or two transformers, a power off relay and an inverter. AAR terminals are provided and clearly marked for the four secondaries, the D.C. input and the A.C. input. A terminal also is provided for an inverter output. The combined load for transformer secondaries and this connection must not exceed the 100 va rating of the inverter.

There are no adjustments required for the HX1 Power Pack. Inspection should be made occasionally of the inverter by opening the A.C. input and checking that the secondary voltage is not appreciably reduced. If it is reduced, be sure that battery voltage is no lower than 10 volts. If battery is above 10 volts and secondary voltage is low, HX1 must be replaced and repaired.

An A.C.-D.C. track circuit is connected as shown below:

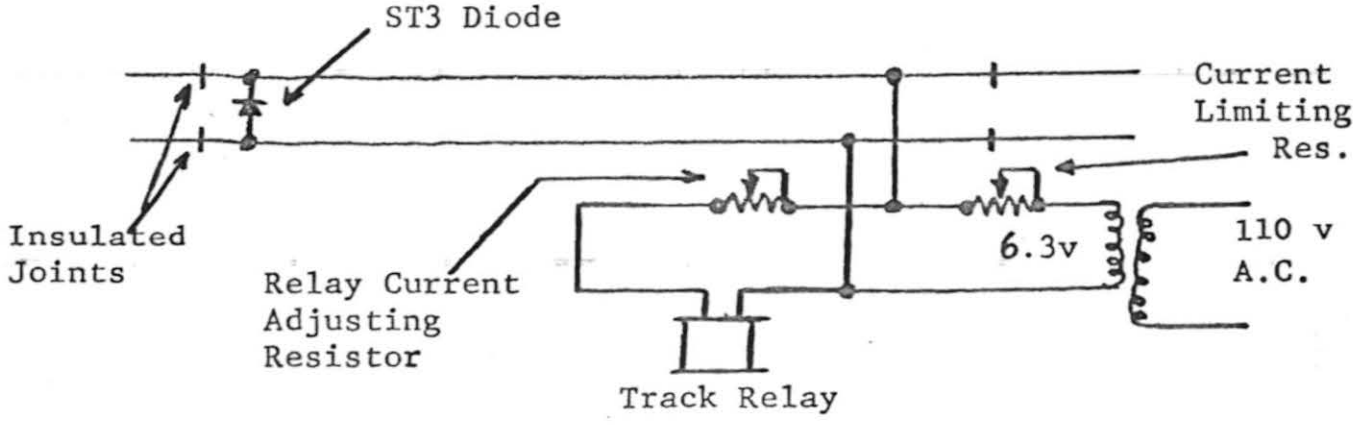

HX-1 UNIT ERTER 100V. A. CAPACITY)

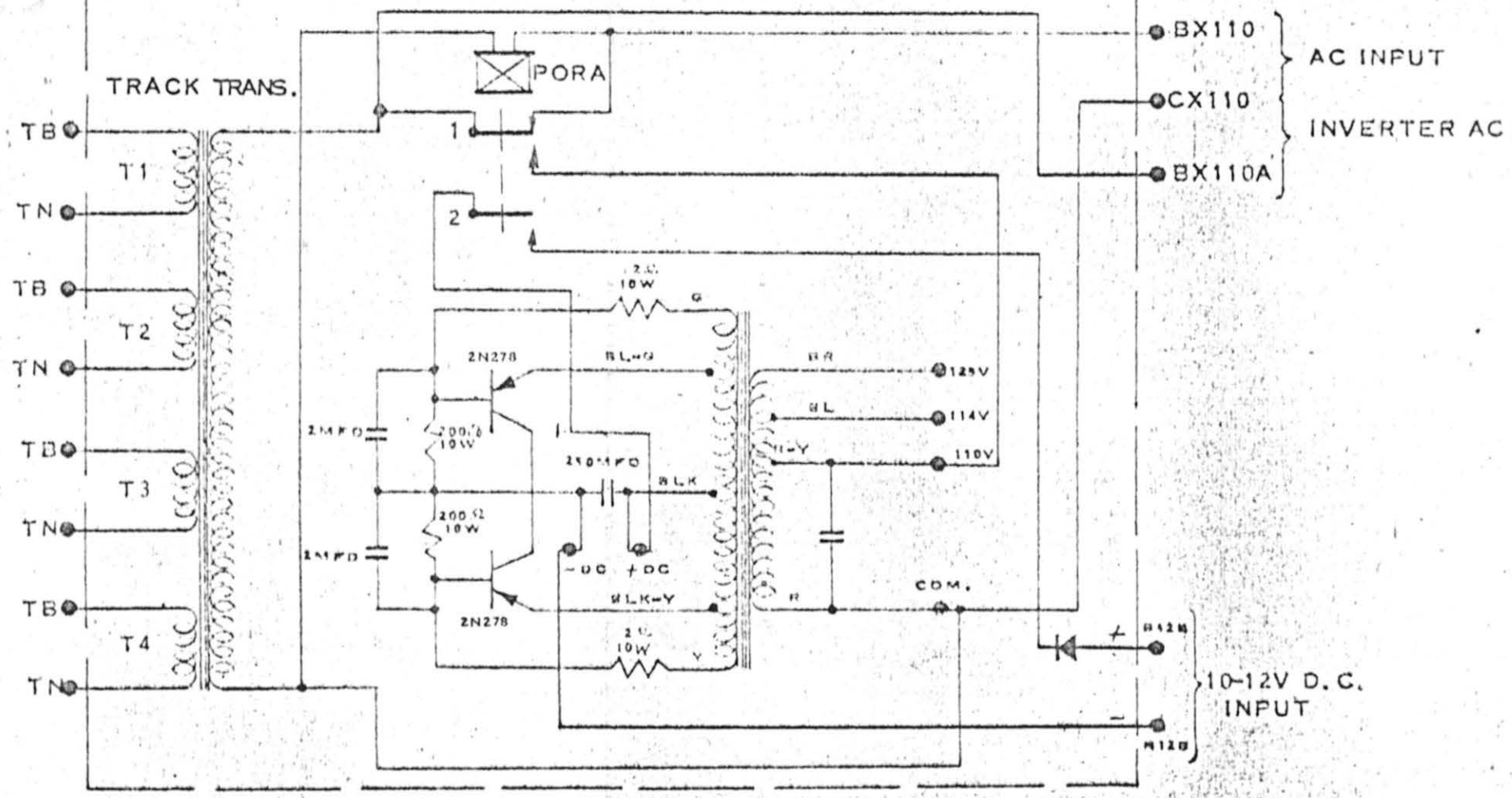

HX1 HWY XING POWER PACK
CIRCUIT DIAGRAM

TRANSCONTROL CORP. PORT WASHINGTON, N.Y.	DATE	DRAWING	SH.
	6.16.70	A80	

TRANSCO HX1 POWER PACK

The A.C. applied to the rails at the one end is fed to the ST3 Diode where one half of the wave is shorted so that the track relay would be fed half wave D.C. pulses. A train shunt or open rail, diode or track lead would prevent the D.C. pulses from being applied to the relay. The relay does not respond to A.C.

DESCRIPTION	CATALOG NO.
HX1 Power Pack, complete	T8-001
Track Transformer for HX1	T8-002
Inverter Transformer for HX1	T8-003
Power Off Relay for HX1	T8-004
Power Transistor Q1 or Q2 for HX1	T8-005
Diode, D.C. Negative Input for HX1	T8-006

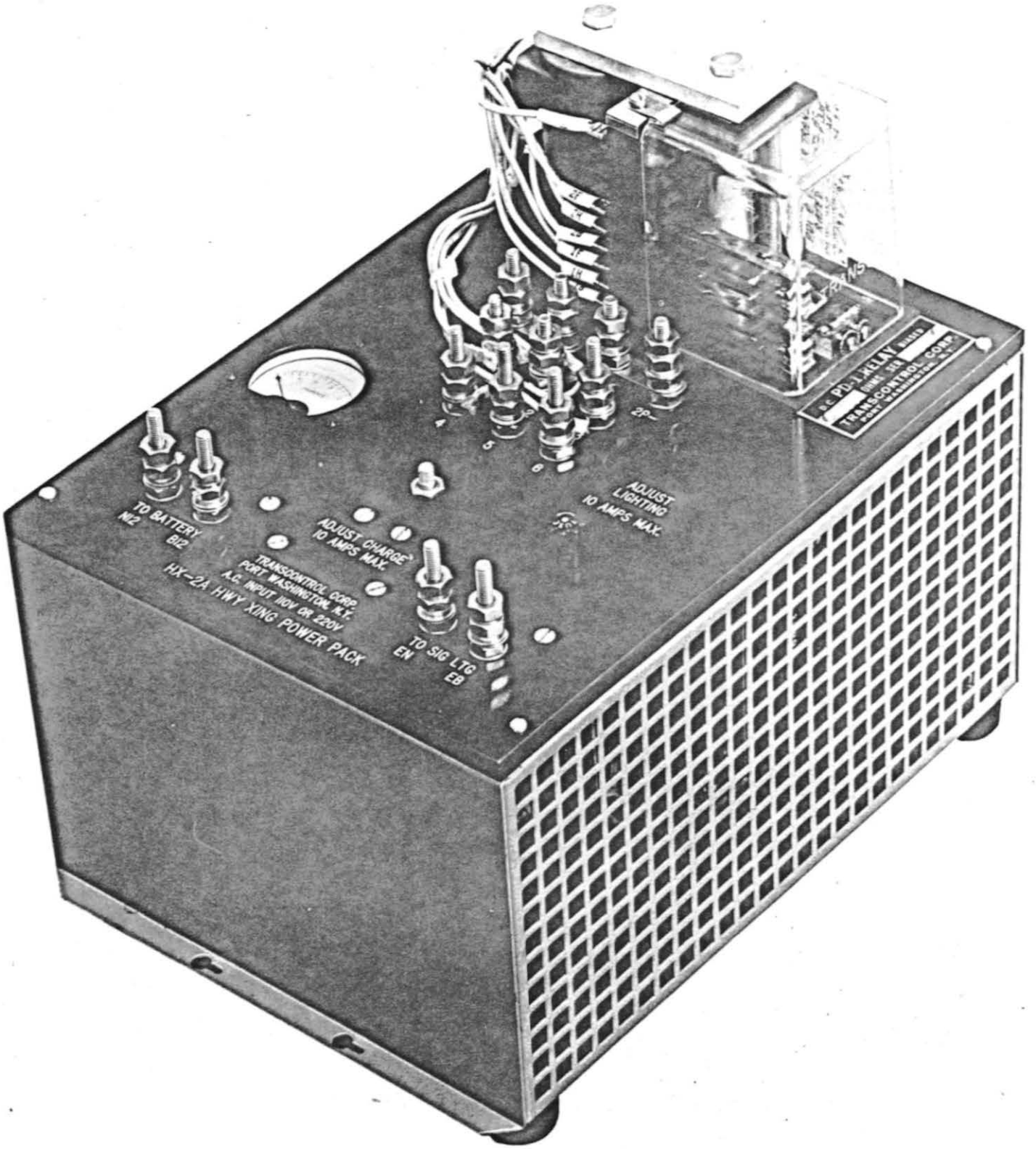
TO BATTERY
N12
B12
ADJUST CHARGE
10 AMPS MAX.
TRANSCONTROL CORP.
PORT WASHINGTON, N.Y.
A.C. INPUT 110V OR 220V
HX-2A HWY XING POWER PACK
TO SIG LTG
EN
EB
ADJUST
LIGHTING
10 AMPS MAX.
4
5
6
2P
TRANSCONTROL CORP.

HX2A UNIT

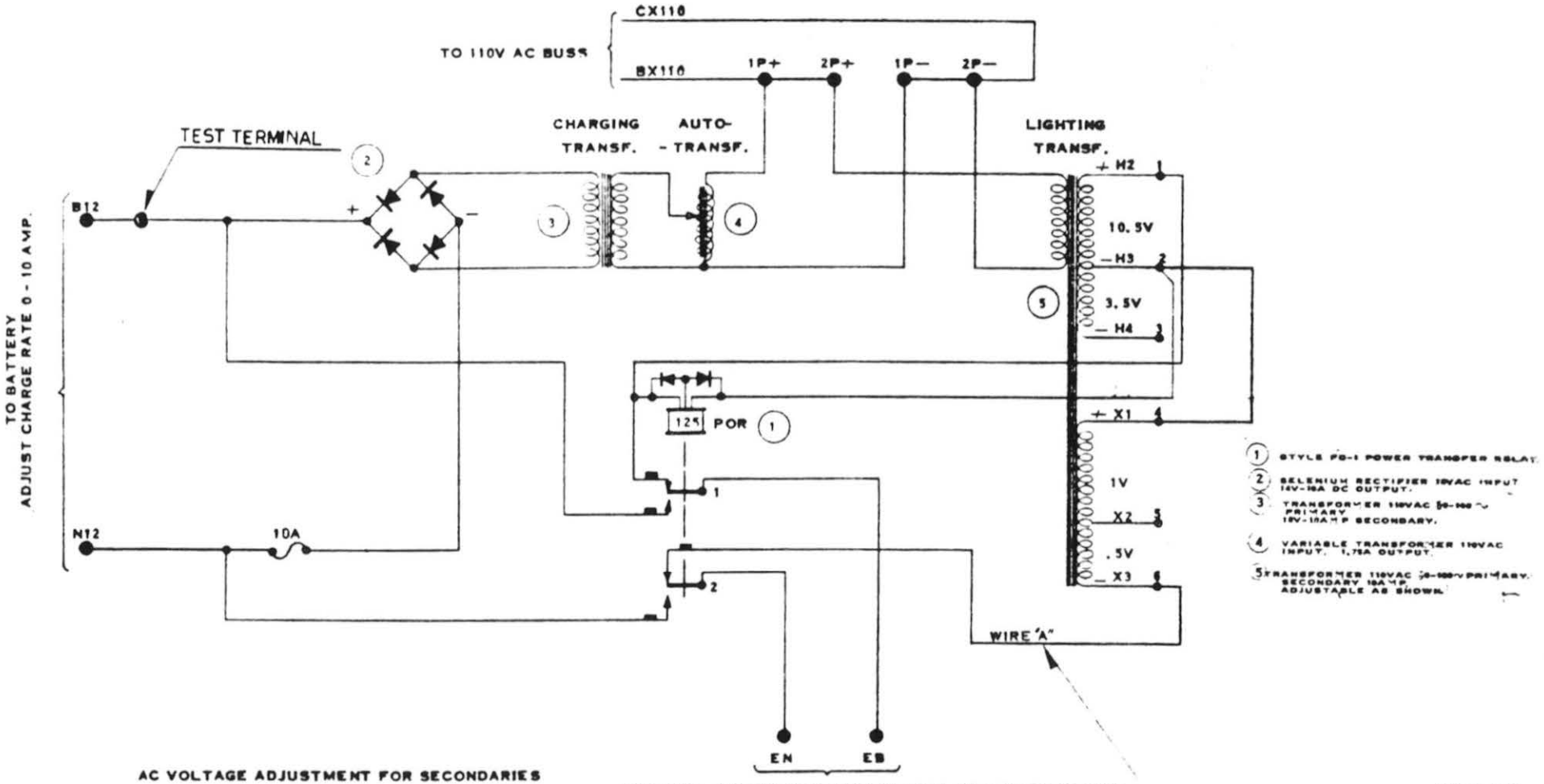

AC VOLTAGE ADJUSTMENT FOR SECONDARIES OF LIGHTING TRANSFORMER

VOLTS	JUMPER	WIRE 'A' TO TERM.
9.0	2 TO 6	4
9.5	2 TO 5	4
10.0	2 TO 6	5
10.5		2
11.0	2 TO 5	6
11.5	2 TO 4	5
12.0	2 TO 4	6

TO SIGNAL LIGHTS (ADJUST VOLTAGE PER CHART BELOW)

VOLTS	JUMPER	WIRE 'A' TO TERM.
12.5	3 TO 6	4
13.0	3 TO 5	4
13.5	3 TO 6	5
14.0		3
14.5	3 TO 5	6
15.0	3 TO 4	5
15.5	3 TO 4	6

Rev. 5.29.69

HX 2A

POWER SUPPLY

TRANSCONTROL CORP. PORT WASHINGTON, N.Y.	DATE	DRAWING	SH. NO.
	4.10.68	A140	1

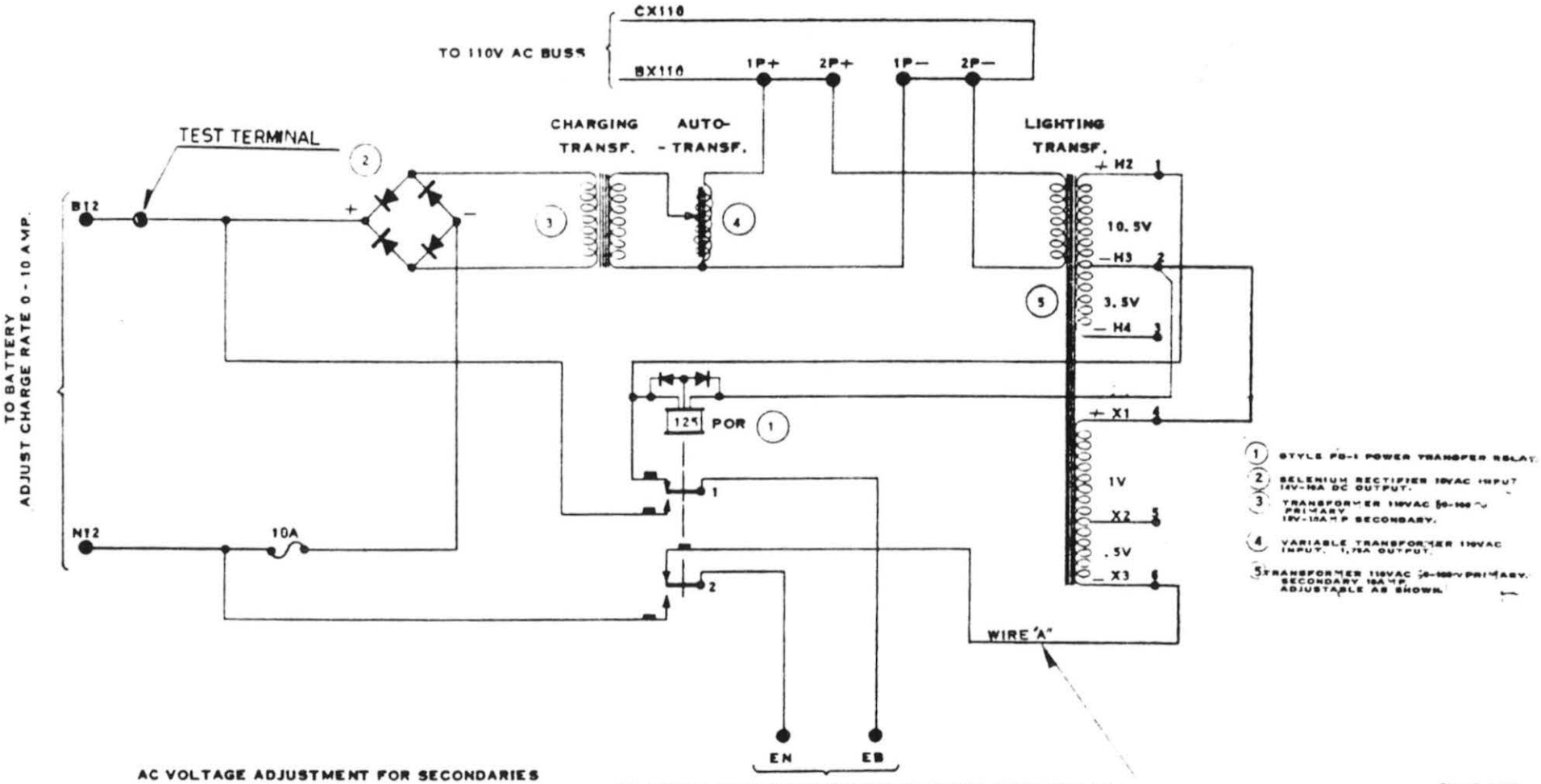

AC VOLTAGE ADJUSTMENT FOR SECONDARIES OF LIGHTING TRANSFORMER

VOLTS	JUMPER	WIRE 'A' TO TERM.
9.0	2 TO 6	4
9.5	2 TO 5	4
10.0	2 TO 6	5
10.5		2
11.0	2 TO 5	6
11.5	2 TO 4	5
12.0	2 TO 4	6

TO SIGNAL LIGHTS (ADJUST VOLTAGE PER CHART BELOW)

VOLTS	JUMPER	WIRE 'A' TO TERM.
12.5	3 TO 6	4
13.0	3 TO 5	4
13.5	3 TO 6	5
14.0		3
14.5	3 TO 5	6
15.0	3 TO 4	5
15.5	3 TO 4	6

Rev 5.29.69

HX 2A

POWER SUPPLY

TRANSCONTROL CORP. PORT WASHINGTON, N.Y.	DATE	DRAWING	SH. NO.
	4.10.66	A140	1

TRANSCO HX2 AND HX2A POWER PACKS

The TRANSCO HX2 line of Power Packs was designed to provide, in one unit, the lighting and battery charging components for highway crossing protection. They have also been found applicable for use in signal systems.

The HX2 unit provides two A.C. lighting sources for signals, maximum capacity 10 amperes each, adjustable in 0.5 volt steps from 9.0 to 15.5 volts. A.C. input may be either 110 volts, 60 Hz. or 220 volts, 60 Hz. Included are two rectifiers for charging two 10 to 12 volt batteries at a maximum rate of 10.0 amperes each. A power off relay transfers the signal lighting load to battery supply in the event of A.C. power failure.

The HX2A unit provides one lighting source, one battery charging rectifier and one power off relay. Ratings are the same as for the HX2.

A.C. voltage adjustments for lighting secondaries of HX2 or HX2A power packs are as follows:

VOLTS	JUMPER	WIRE "A" TO TERMINAL
9.0	2 to 6	4
9.5	2 to 5	4
10.0	2 to 6	5
10.5	2 to 6	2
11.0	2 to 5	6
11.5	2 to 4	5
12.0	2 to 4	6
12.5	3 to 6	4
13.0	3 to 5	4
13.5	3 to 6	5
14.0	none	3
14.5	3 to 5	6
15.0	3 to 4	5
15.5	3 to 4	6

DESCRIPTION	CATALOG NO.
HX2 Power Pack, Complete	T8-020
HX2A Power Pack, Complete	T8-021
Transformer for HX2 or HX2A Lighting	T8-022

TRANSCO HX2 AND HX2A POWER PACKS

DESCRIPTION	CATALOG NO.
Transformer, Fixed, for HX2 or HX2A Battery Charging	T8-023
Transformer, Adjustable, for HX2 or HX2A Battery Charging	T8-024
Rectifier Bridge for HX2 or HX2A	T8-025
Power Off Relay for HX2	T8-026
Power Off Relay for HX2A	T8-027

TRANSCO I1 INVERTER

12 VOLTS D.C. 115 VOLTS 60 CYCLES A.C. 100 VA

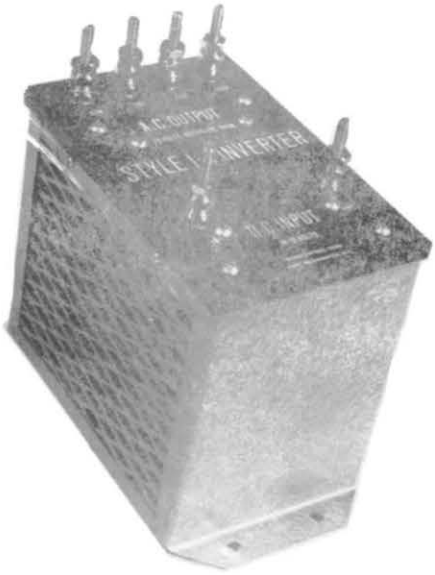

ASSEMBLED VIEW

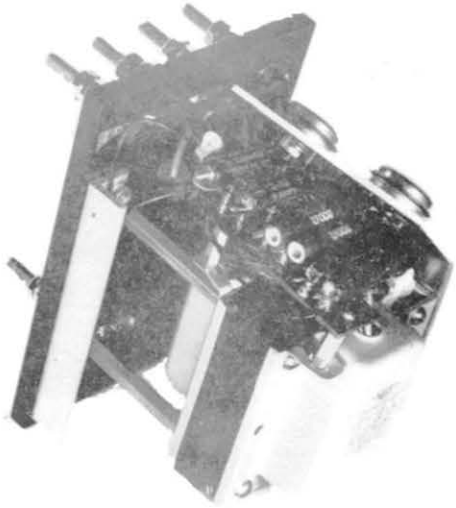

VIEW SHOWING COMPONENTS

Transcontrol Corporation

2 YENNICOCK AVE., PORT WASHINGTON, N. Y.

Phone: POrt Washington 7-4500

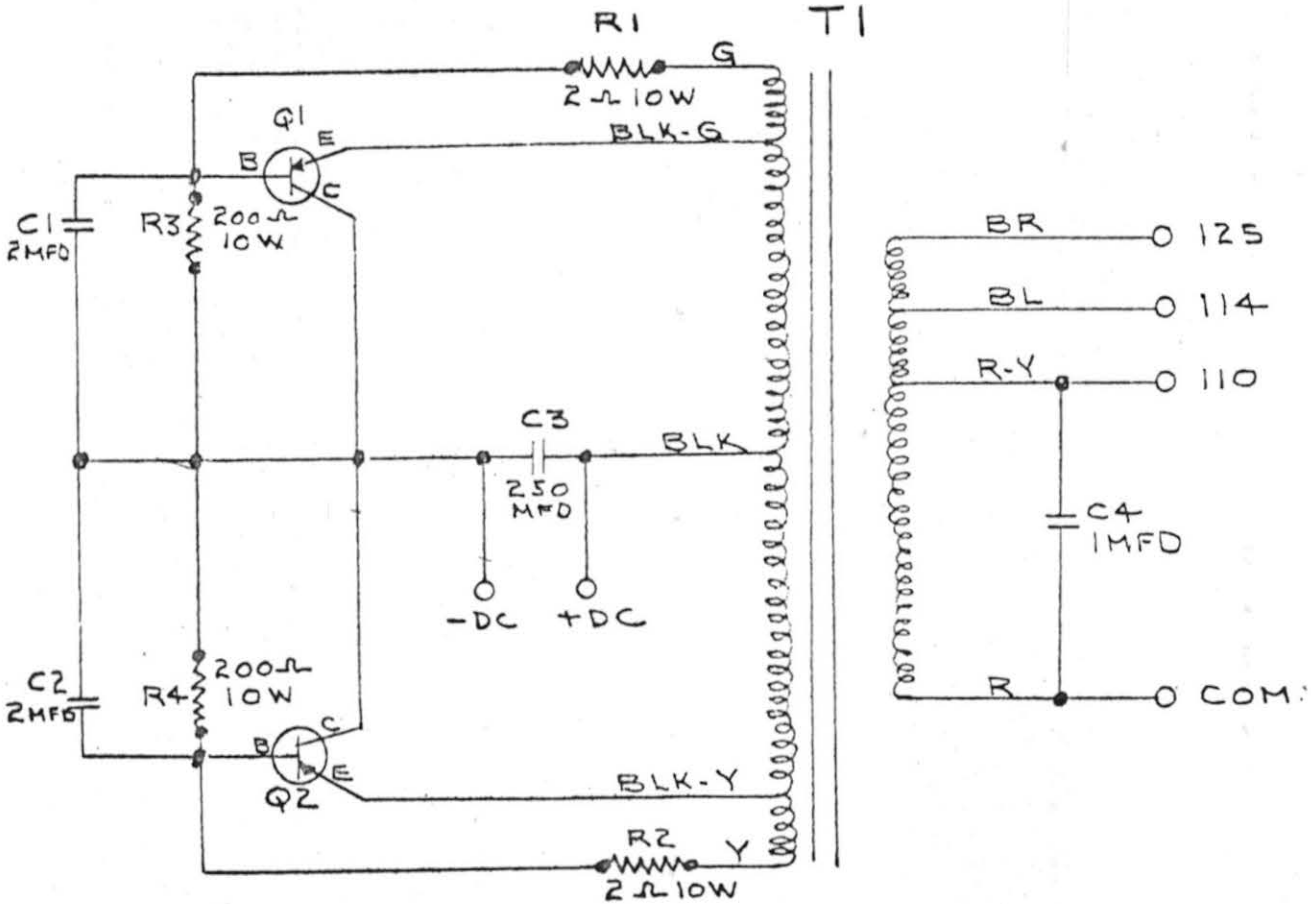

STYEL I-1 TRANSISTORIZED INVERTE

CIRCUIT DIAGRAM

TRANSCONTROL CORP. PORT WASHINGTON, N.Y.	DATE	DRAWING	SH. N
	9-23-63	A55	1

TRANSCO

HIGHWAY CROSSING CONTROL DEVICES

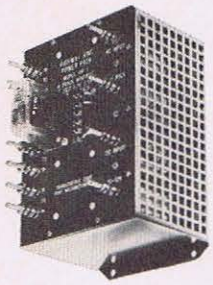

H X 1 UNIT
PROVIDES CONTINUOUS AC POWER FOR 4 AC, DC TRACK CIRCUITS

H X 2 UNIT
PROVIDES CONTINUOUS SIGNAL LIGHTING POWER OF MAX. 20 AMPS. AND BATTERY CHARGING CURRENT OF MAX. 10 AMPS

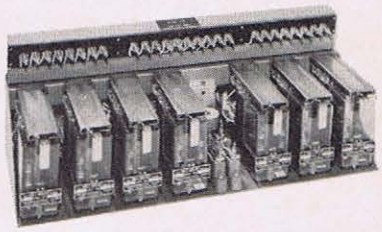

H X 3 UNIT
RELAY LOGIC UNIT FOR CONTROL OF SINGLE TRACK HWY. XING. RELAYS ARE PD 1 PLUG IN TYPE

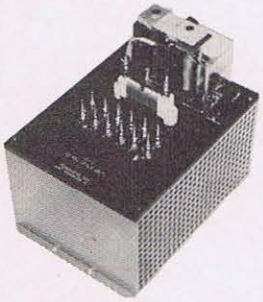

H X 5 UNIT
PROVIDES ISLAND TRACK CIRCUIT WITHOUT INSULATED JOINTS

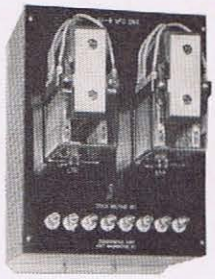

H X 6 UNIT
TRANSCEIVER UNIT FOR "UFO" JOINTLESS HWY. XING TRACK CIRCUIT

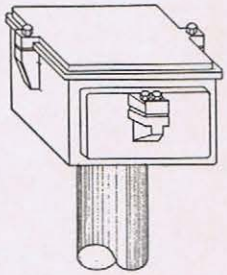

H X 7 UNIT
COUPLING UNIT FOR "UFO" JOINTLESS HWY. XING TRACK CIRCUIT

PD 1 XT TIME DELAY RELAY
PROVIDES FAIL SAFE CIRCUIT FOR PREVENTING LOCKOUT OF DIRECTIONAL STICK RELAYS

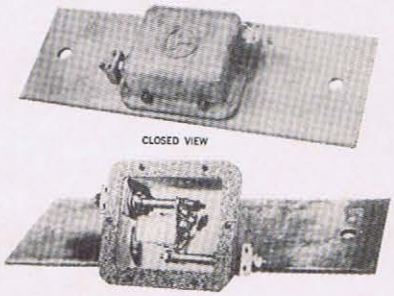

S T 3 RECTIFIER
TRACK UNIT FOR AC, DC TRACK CIRCUIT

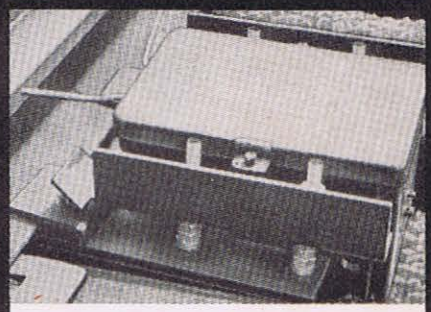

SILEC RAIL CONTACTOR
PROVIDES DIRECTIONAL APPROACH IN SWITCHING TERRITORY. USED FOR RESTARTS ETC.

Transcontrol Corp.

TEL. 516-883-6900 • BOX 389, PORT WASHINGTON, N.Y.

Reprinted from *Railway System Controls*, January 1971

TRANSCO

HIGHWAY XING UNITS

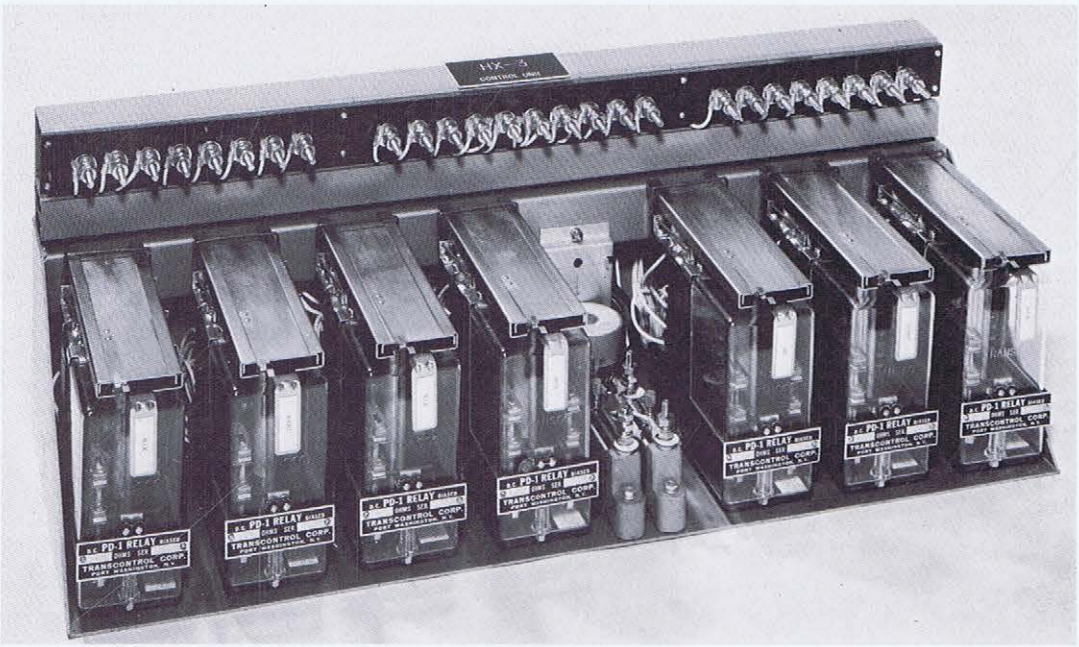

HX3 CONTROL UNIT Dimensions: 32″ wide, 11″ high, 11″ deep

Basic unit for directional control consisting of 7 PD1 plug-in relays (EA, WA, ES, WS, XTR, XR and FLR) interwired in standard AAR manner. With AAR terminals for connecting to track, signals, power and line. Relays EA, WA and XTR can be furnished as track, line or AFO responsive.

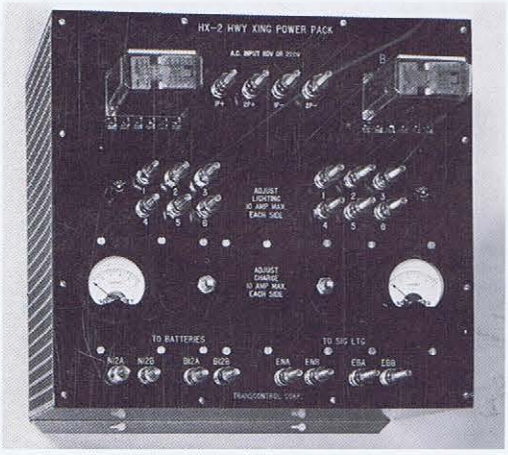

HX2 POWER PACK
Dimensions:
14″ wide, 7¼″ high, 13″ deep

Provides 2 AC lighting sources for signals, max. cap. 10 amps each, adjustable in 0.5 volt steps from 9.0 to 15.5 volts with 2 power off relays to transfer to DC sources. Includes 2 automatic rectifiers for charging two 10 or 12 volt batteries at a max. rate of 10.0 amps each.

HX2A POWER PACK
Dimensions:
10″ wide, 7¼″ high, 13″ deep

Provides AC lighting source for signals, max. cap. 10 amps adjustable in 0.5 volt steps from 9.0 to 15.5 volts with 1 power off relay to transfer to DC source. Includes automatic rectifier for charging a 10 or 12 volt battery at a max. rate of 10.0 amps.

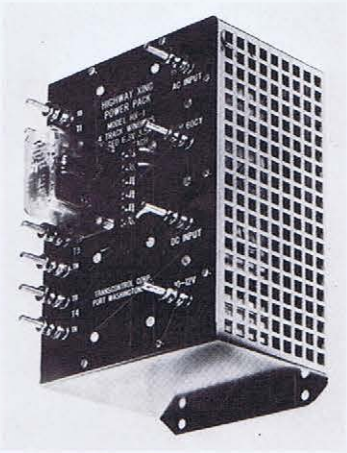

HX1 POWER PACK
Dimensions:
7″ wide, 5″ high, 10″ deep

Furnishes normal and standby power for 4 AC-DC track circuits.

Transcontrol Corp.

Tel. 516-883-6900 • No. 2 YENNICOCK AVE., PORT WASHINGTON, N.Y.

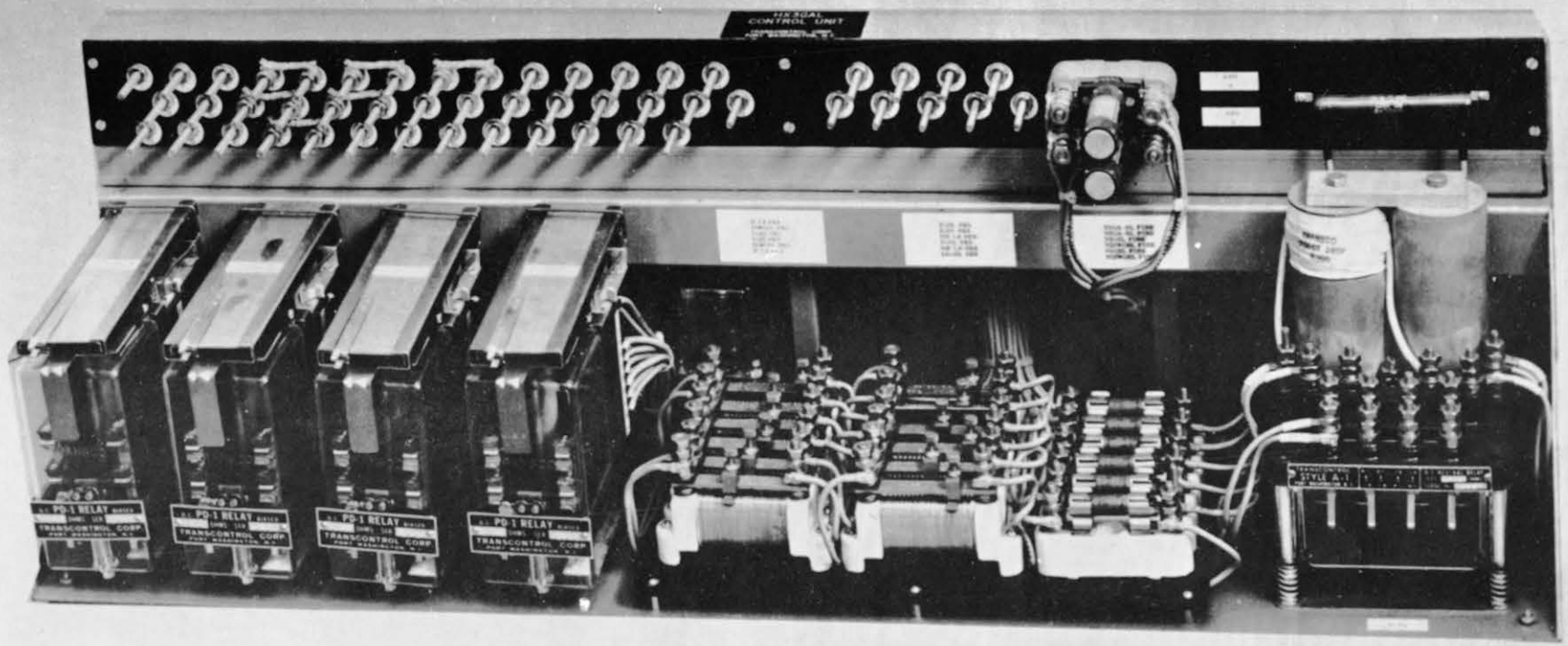

HX3GAL UNIT
FOR GATE CONTROL

TRANSCO HX3 CONTROL UNIT PACKAGES

The TRANSCO HX3 line of Control Units makes available a prewired package of relays and other devices required for various highway crossing protection arrangements.

Connections to track or line, signals and power are made to AAR terminals. The PD1 plug-in relays are interwired in a standard manner for each type. Field wiring is simplified. The units may be mounted in relay cases, houses, or, for industrial applications, in housings available near the crossing.

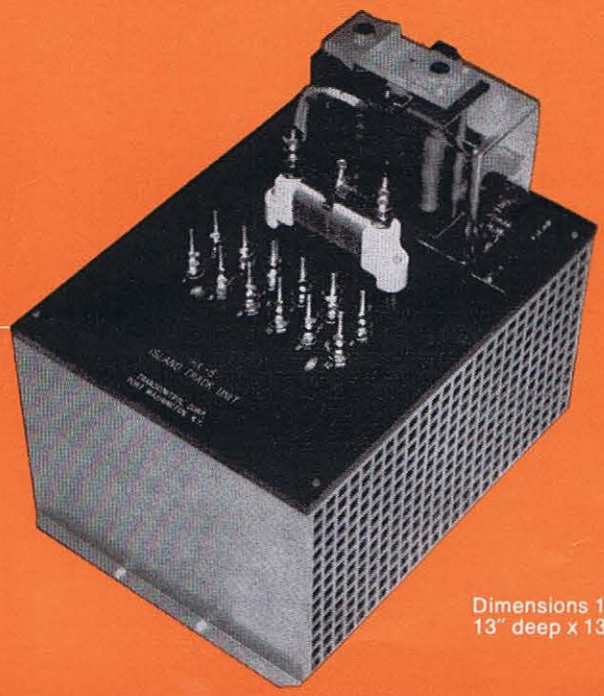

TRANSCO HX5 UNIT

FOR UPDATING EXISTING HIGHWAY CROSSINGS NOT EQUIPPED WITH ISLAND TRACK CIRCUIT

Dimensions 10" wide x 13" deep x 13" wide

- **No additional insulated joints needed**
- **Time element feature included to prevent "lockout"**

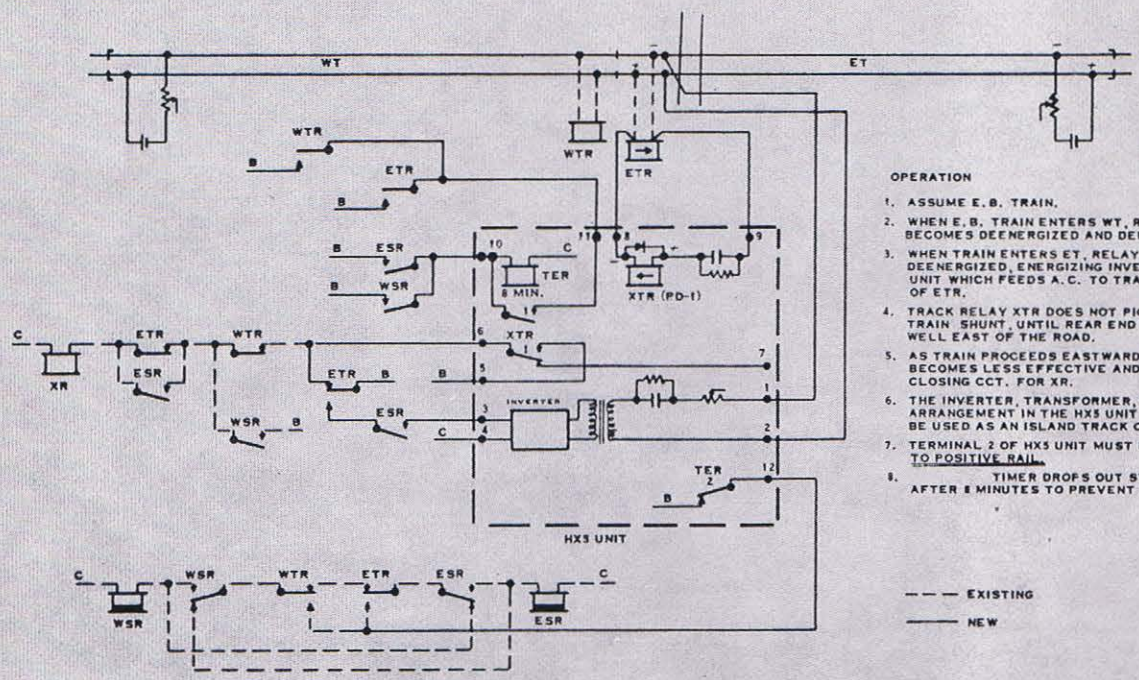

OPERATION

1. ASSUME E.B. TRAIN.
2. WHEN E.B. TRAIN ENTERS WT, RELAY WTR BECOMES DEENERGIZED AND DEENERGIZES XR.
3. WHEN TRAIN ENTERS ET, RELAY ETR BECOMES DEENERGIZED, ENERGIZING INVERTER IN HX5 UNIT WHICH FEEDS A.C. TO TRACK LEADS OF ETR.
4. TRACK RELAY XTR DOES NOT PICK UP, DUE TO TRAIN SHUNT, UNTIL REAR END OF TRAIN IS WELL EAST OF THE ROAD.
5. AS TRAIN PROCEEDS EASTWARD, TRAIN SHUNT BECOMES LESS EFFECTIVE AND XTR PICKS UP, CLOSING CCT. FOR XR.
6. THE INVERTER, TRANSFORMER, RELAY ARRANGEMENT IN THE HX5 UNIT CAN THUS BE USED AS AN ISLAND TRACK CCT.
7. TERMINAL 2 OF HX5 UNIT MUST BE CONNECTED TO POSITIVE RAIL.
8. TIMER DROPS OUT STICK RELAYS AFTER 8 MINUTES TO PREVENT LOCK-OUT.

Transcontrol Corp.

TEL. 516-883-6900 • PORT WASHINGTON, N.Y. 11050

Reprinted from *Railway Signaling & Communications*, July 1969

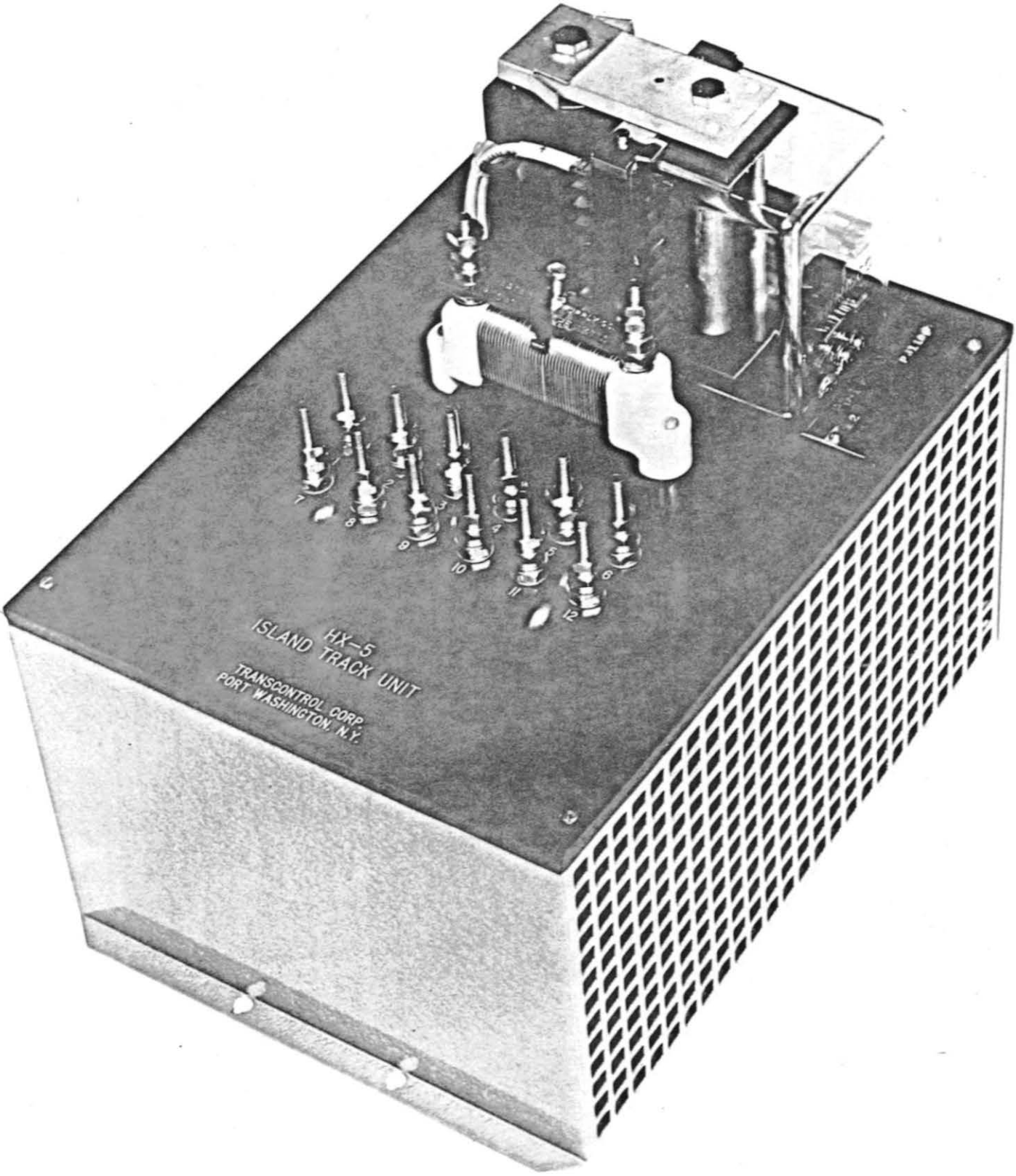
HX-5
ISLAND TRACK UNIT
TRANSCONTROL CORP.
PORT WASHINGTON, N.Y.

HX5 UNIT

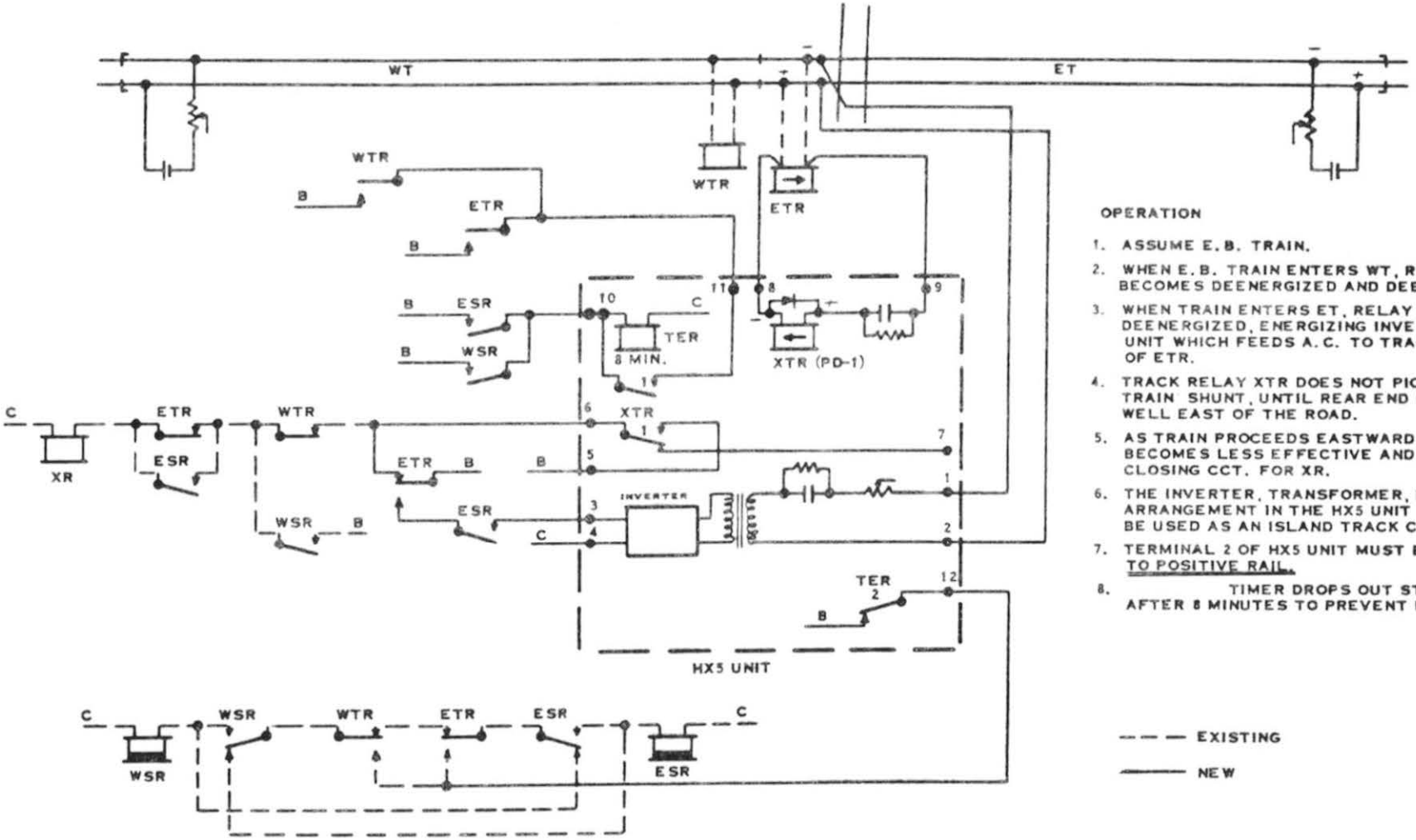

OPERATION

1. ASSUME E.B. TRAIN.
2. WHEN E.B. TRAIN ENTERS WT, RELAY WTR BECOMES DEENERGIZED AND DEENERGIZES XR.
3. WHEN TRAIN ENTERS ET, RELAY ETR BECOMES DEENERGIZED, ENERGIZING INVERTER IN HX5 UNIT WHICH FEEDS A.C. TO TRACK LEADS OF ETR.
4. TRACK RELAY XTR DOES NOT PICK UP, DUE TO TRAIN SHUNT, UNTIL REAR END OF TRAIN IS WELL EAST OF THE ROAD.
5. AS TRAIN PROCEEDS EASTWARD, TRAIN SHUNT BECOMES LESS EFFECTIVE AND XTR PICKS UP, CLOSING CCT. FOR XR.
6. THE INVERTER, TRANSFORMER, RELAY ARRANGEMENT IN THE HX5 UNIT CAN THUS BE USED AS AN ISLAND TRACK CCT.
7. TERMINAL 2 OF HX5 UNIT MUST BE CONNECTED TO POSITIVE RAIL.
8. TIMER DROPS OUT STICK RELAYS AFTER 8 MINUTES TO PREVENT LOCK-OUT.

— — — EXISTING

——— NEW

FOR USE WITH D.C. TRACK CIRCUITS

HX-5 ISLAND TRACK UNIT CIRCUITS

TRANSCONTROL CORP. PORT WASHINGTON, N.Y.	DATE	DRAWING	SH. NO.
	5.15.69	A136	1

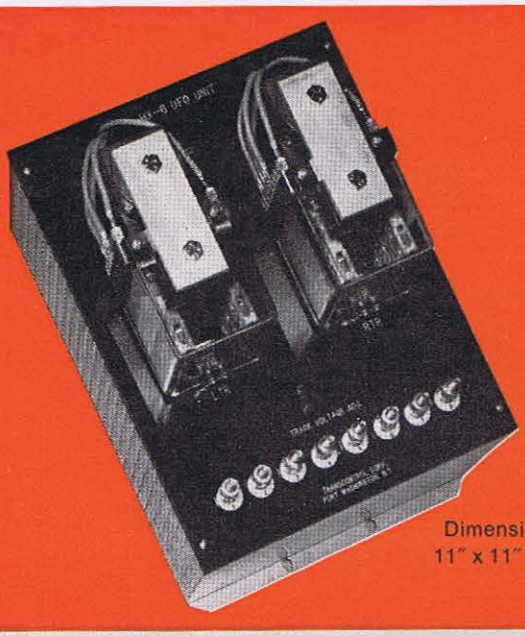

Dimensions:
11" x 11" x 11"

TRANSCO UFO

(Unamplified Frequency Overlay)

JOINTLESS TRACK CIRCUIT FOR HIGHWAY CROSSINGS

(patent pending)

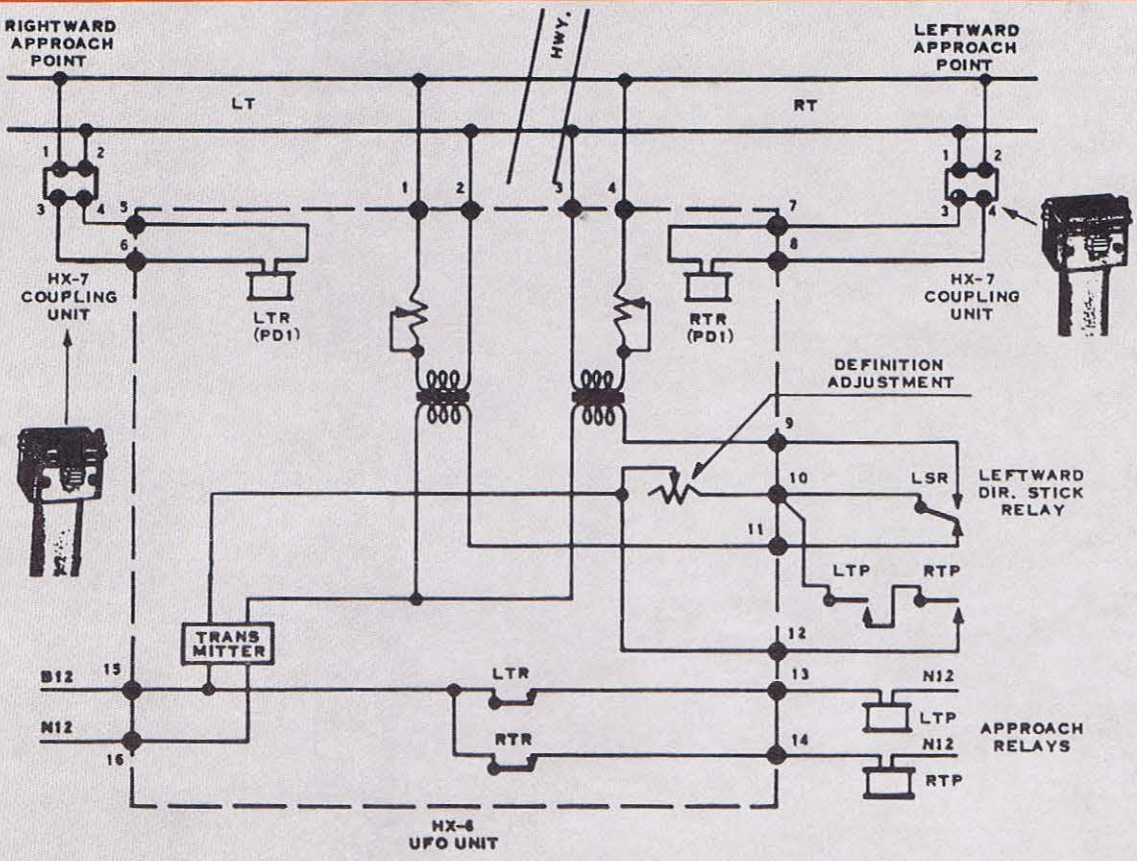

Salient Features:

1. Energy in track circuit is well above noise level. No external energy required at output end.
2. Highly resistant to lightning and surges.
3. Completely satisfies AAR "fail safe" requirements.

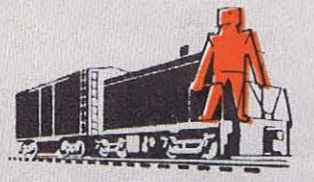

Transcontrol Corp.

TEL. 516-883-6900 • PORT WASHINGTON, N.Y. 11050

Reprinted from *Railway Signaling & Communications*, December, 1969

TRANSCO

PD1XT TIME DELAY RELAY

FOR PREVENTING LOCKOUT OF HIGHWAY CROSSING DIRECTIONAL STICK RELAY DUE TO TRACK CIRCUIT FAILURE.

DIMENSIONS
7" Wide X 10" Deep X 10" High

Connect as shown in heavy lines below.

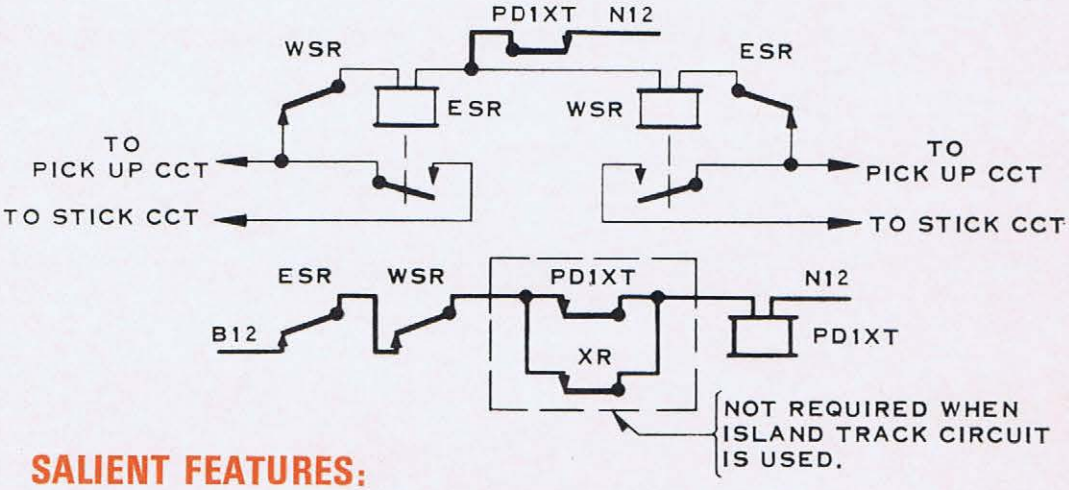

SALIENT FEATURES:

1. AVAILABLE IN 4 MIN., 8 MIN. AND 12 MIN. RELEASE TIME.
2. TIME–OUT IS BASED ON FAIL SAFE, CLOSED CIRCUIT PRINCIPLE.
3. AVAILABLE IN PLUG-IN ARRANGEMENT.

Transcontrol Corp.

TEL. 516-883-6900 • BOX 389, PORT WASHINGTON, N.Y.

Reprinted from *Railway System Controls*, October 1970

TRANSCO

HIGHWAY XING UNITS

HX-9 UNIT

Protects XR Relay Against a Loss of Shunt

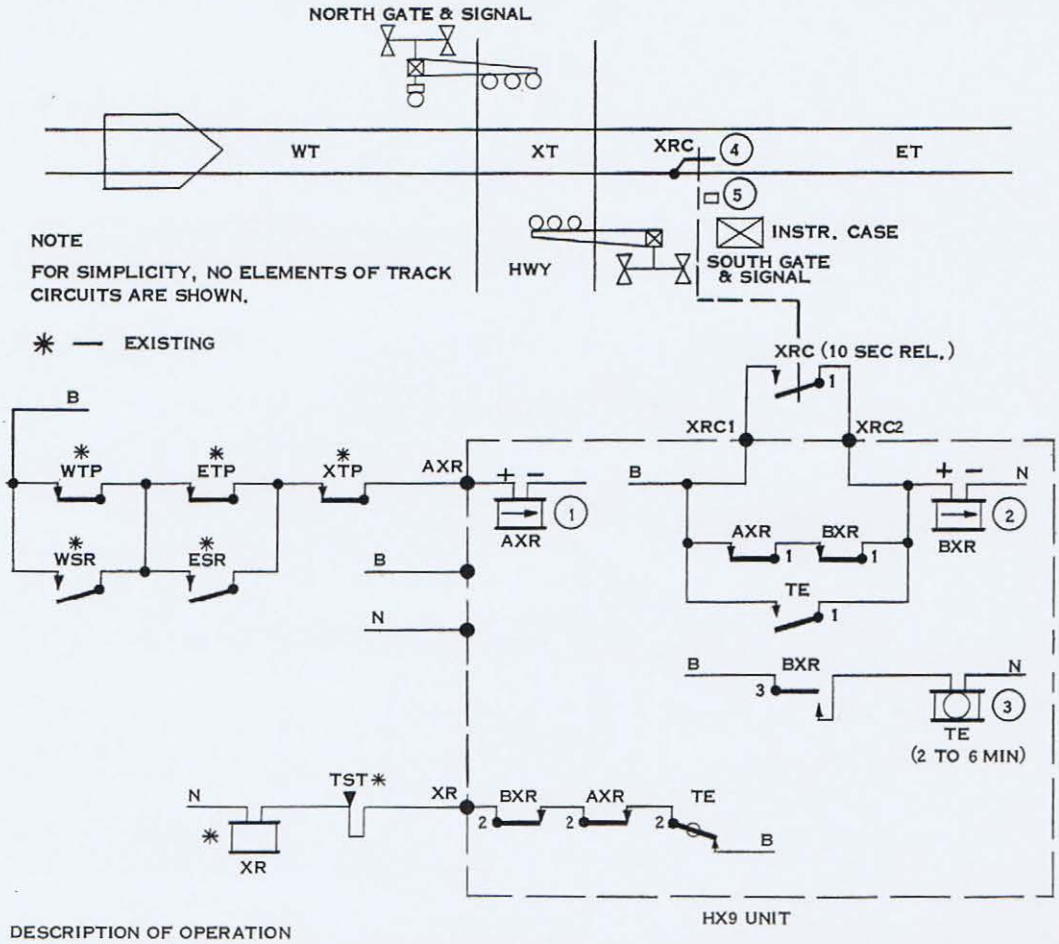

DESCRIPTION OF OPERATION

1) ASSUME AN EAST BOUND TRAIN ENTERING WT TRACK CIRCUIT, APPROACHING THE XING, AND CAUSING AXR, BXR, AND XR RELAYS TO RELEASE.

2) BXR RELAY, BEING A STICK RELAY, WILL STAY DEENERGIZED EVEN IF THE TRAIN LOSES SHUNT. THE EXISTING XR RELAY CONTROLLED BY AXR AND BXR REMAINS DEENERGIZED.

3) THE TRAIN NOW ENTERS TRACK CIRCUIT ET, AND AXR RELAY PICKS UP IN THE USUAL MANNER. SILEC RAIL CONTACTOR XRC, ACTIVATED BY A WHEEL OF THE TRAIN, CLOSES ITS CONTACT FOR 10 SEC THUS ENERGIZING BXR RELAY. XR RELAY CONTROLLED BY AXR AND BXR BECOMES ENERGIZED.

4) IF A TRAIN ENTERS WT OR ET TRACK CIRCUIT AND RETURNS WITHOUT GOING THROUGH THE XING, OR IF FOR A WEST BOUND SLOW MOVING TRAIN SILEC RAIL CONTACTOR XRC RELEASES BEFORE AXR RELAY BECOMES ENERGIZED, BXR RELAY WILL BE RESET BY A CONTACT OF TE RELAY.

Transcontrol Corporation

2 YENNICOCK AVE., PORT WASHINGTON, N.Y. 11050

TEL. 516 883 6900

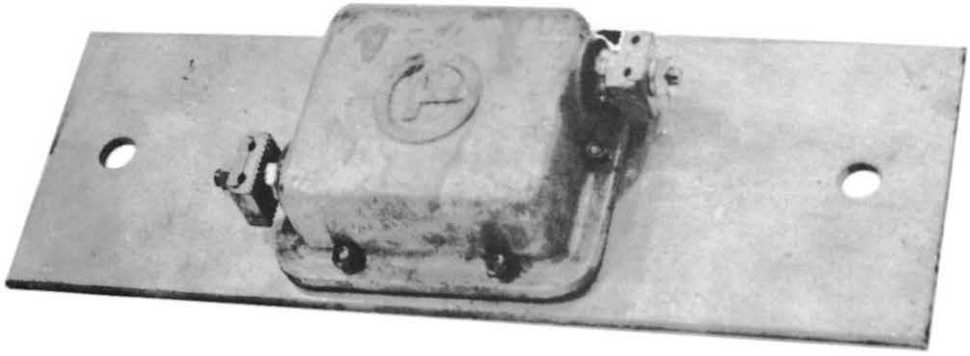

CLOSED VIEW

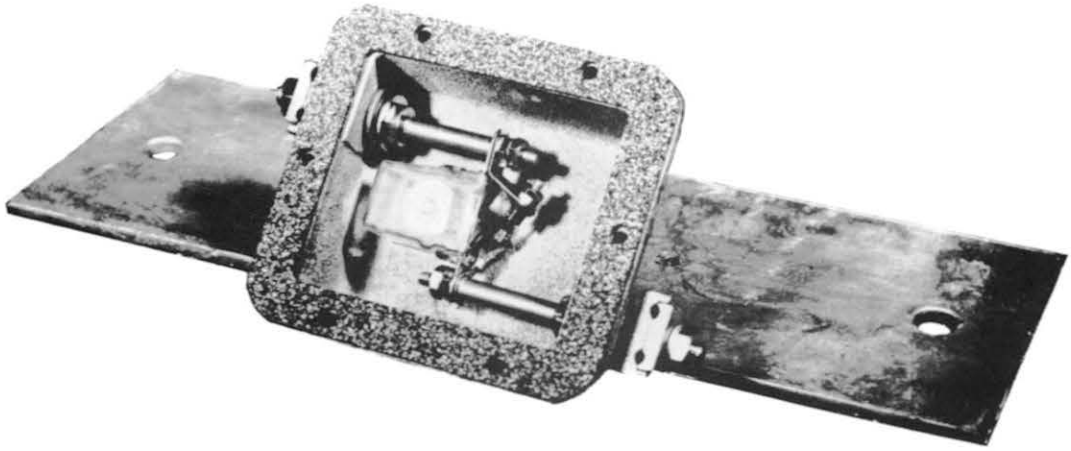

OPEN VIEW

STYLE ST3 RECTIFIER FOR AC-DC TRACK CIRCUIT

A low cost silicon rectifier of 12 amp. peak capacity, protected by equalizer and fuse. Completely waterproof for installing between ties. One weatherproof lug on each side for track connections.

Transcontrol Corporation

2 YENNICOCK AVE., PORT WASHINGTON, N. Y.
Phone: POrt Washington 7-4500

FLASHING LIGHT SIGNAL

PLATE D101

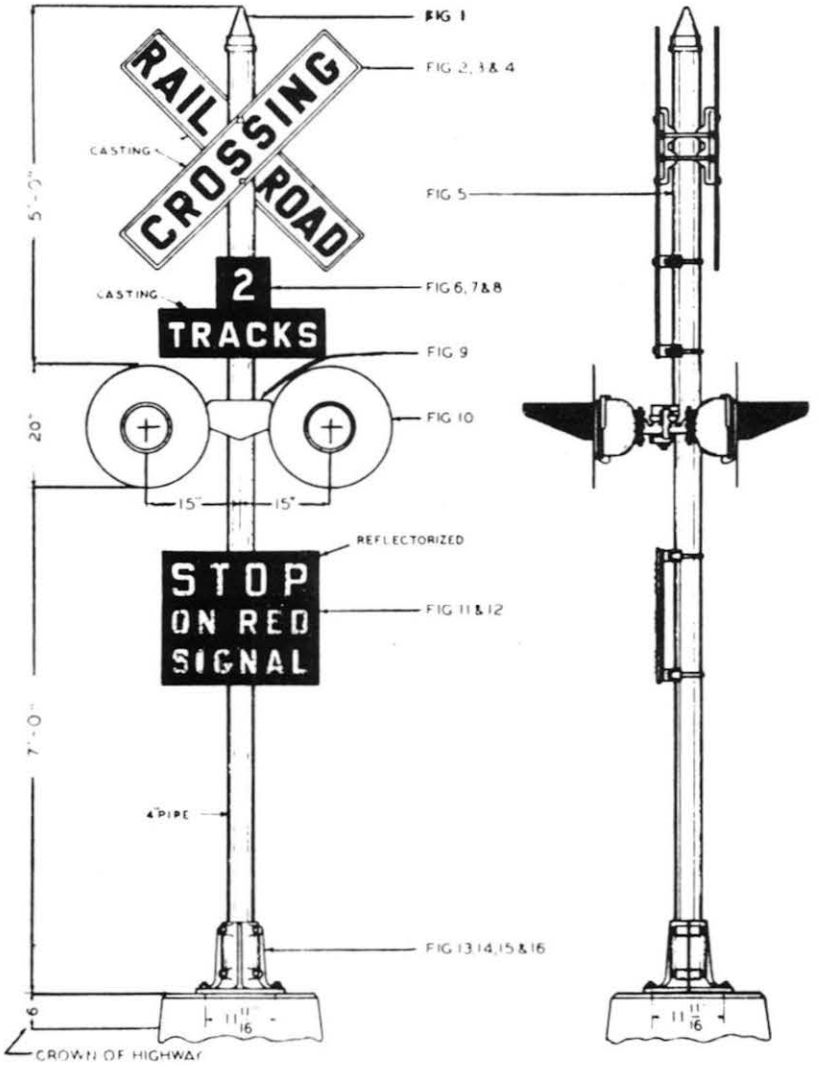

Transcontrol Corporation

2 YENNICOCK AVENUE, PORT WASHINGTON, N.Y.

Phone: 516 - 883 - 6900

Dwg. A12, Sh. 1
12/6/62

INSTRUMENT CASES,
HOUSES & RACKS

TRANSCONTROL CORP.

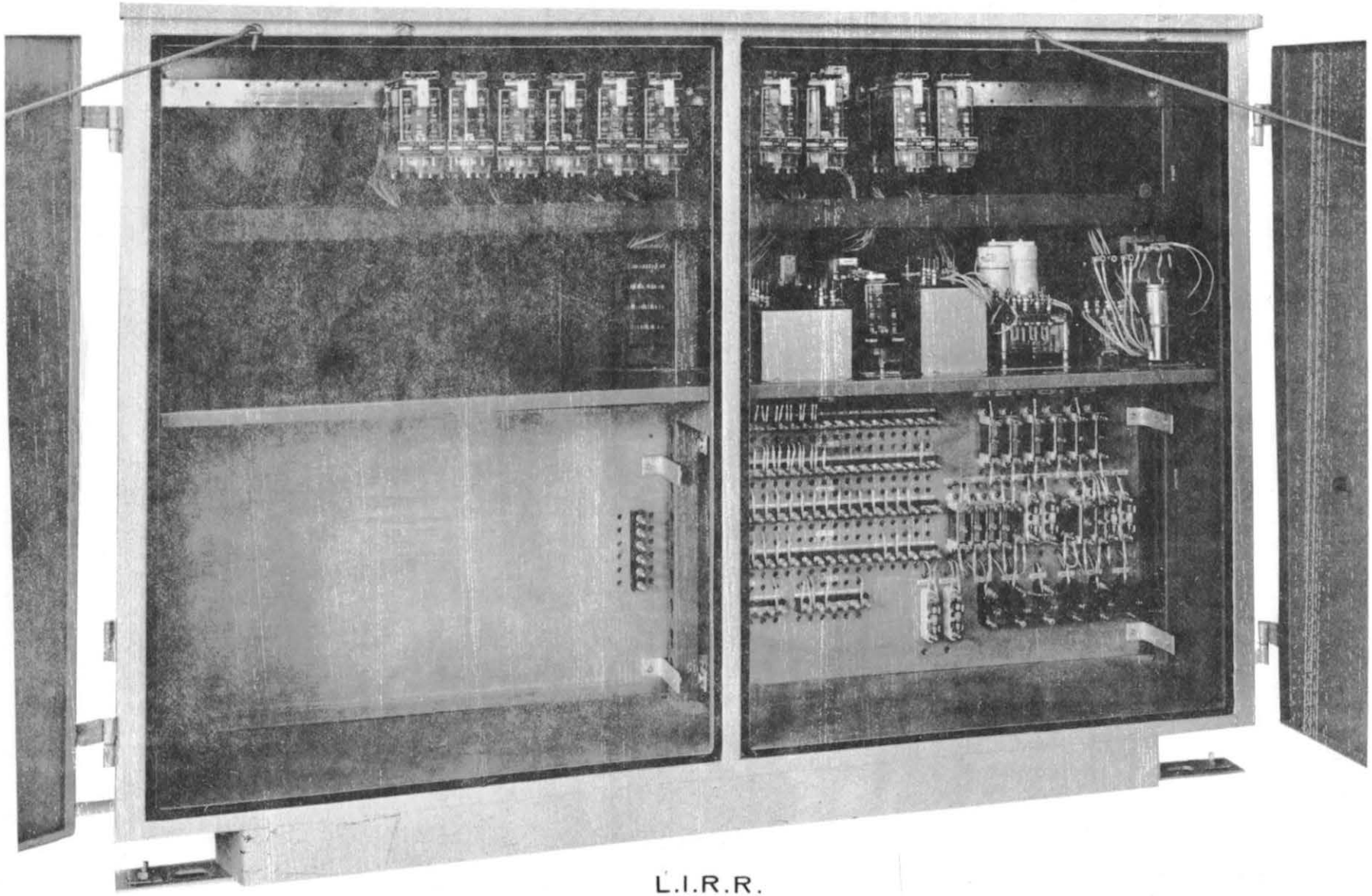

L.I.R.R.
FACTORY WIRED INSTRUMENT CASE
FOR GATE INSTALLATION
USING PD-1 PLUG-IN RELAYS

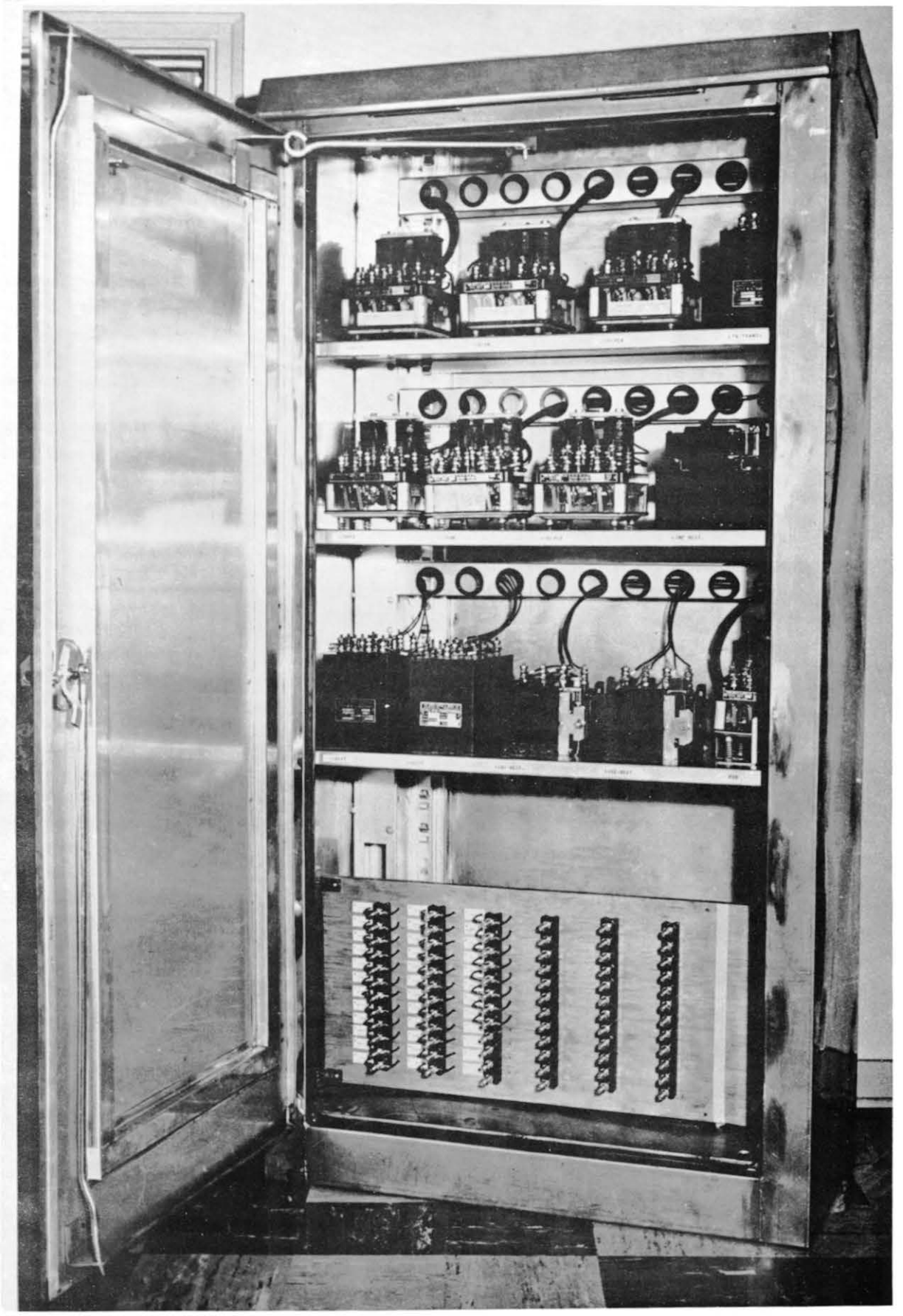

WIRED INSTRUMENT CASE
WITH CONVENTIONAL RELAYS

WIRED INSTRUMENT CASE
WITH HX3 UNIT, HX2A UNIT
& AFO EQUIPMENT

TRANSCO KNOCK-DOWN INSTRUMENT CASES
KD 300 EXPLODED VIEW

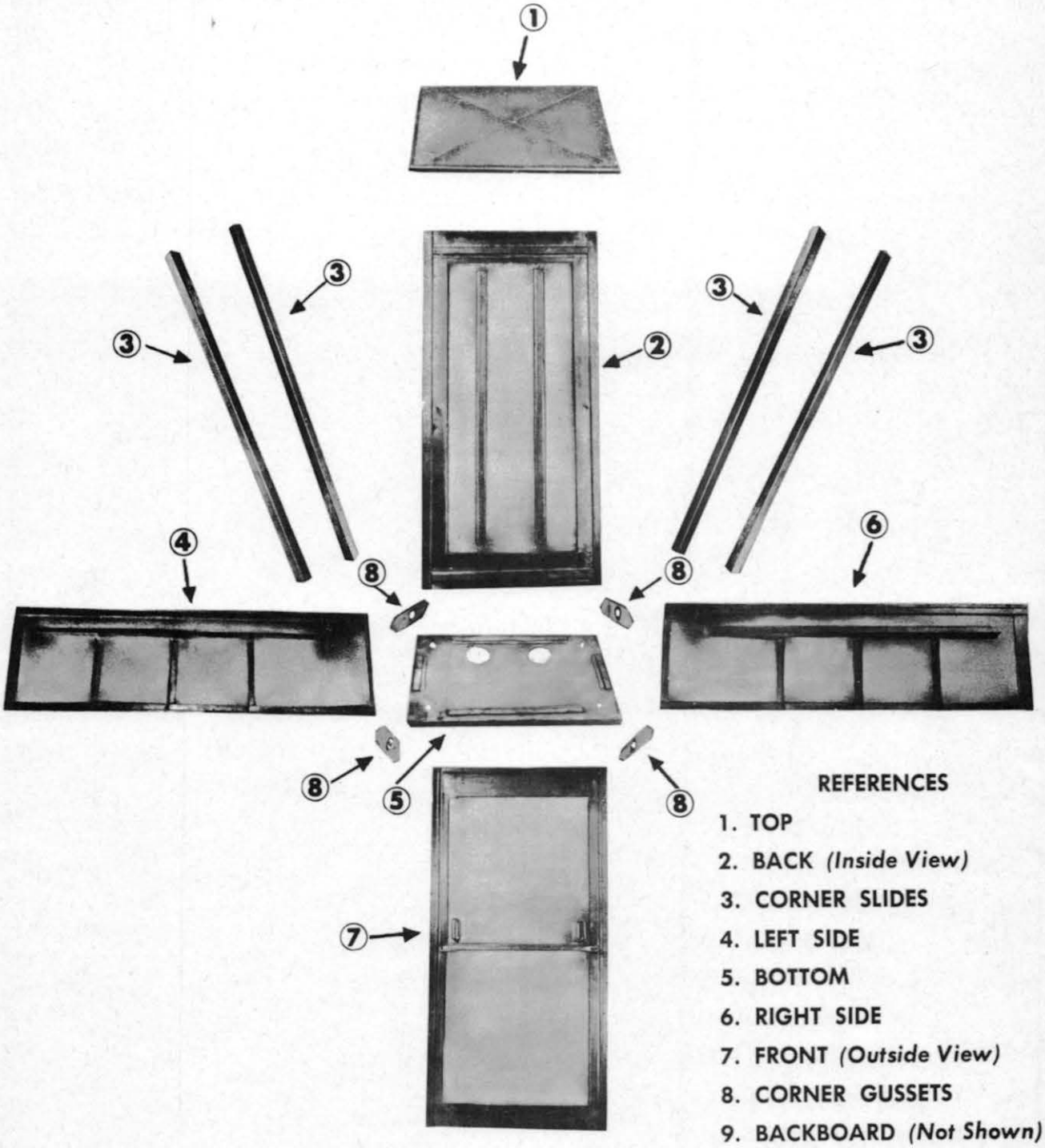

REFERENCES

1. TOP
2. BACK *(Inside View)*
3. CORNER SLIDES
4. LEFT SIDE
5. BOTTOM
6. RIGHT SIDE
7. FRONT *(Outside View)*
8. CORNER GUSSETS
9. BACKBOARD *(Not Shown)*
10. SHELVES *(Not Shown)*

Transcontrol Corporation

2 YENNICOCK AVE., PORT WASHINGTON, N. Y.

Phone: POrt Washington 7-4500

SS—Stainless Steel instrument cases

Hundreds in Service . . . many for 5 years without painting — look as good as when installed

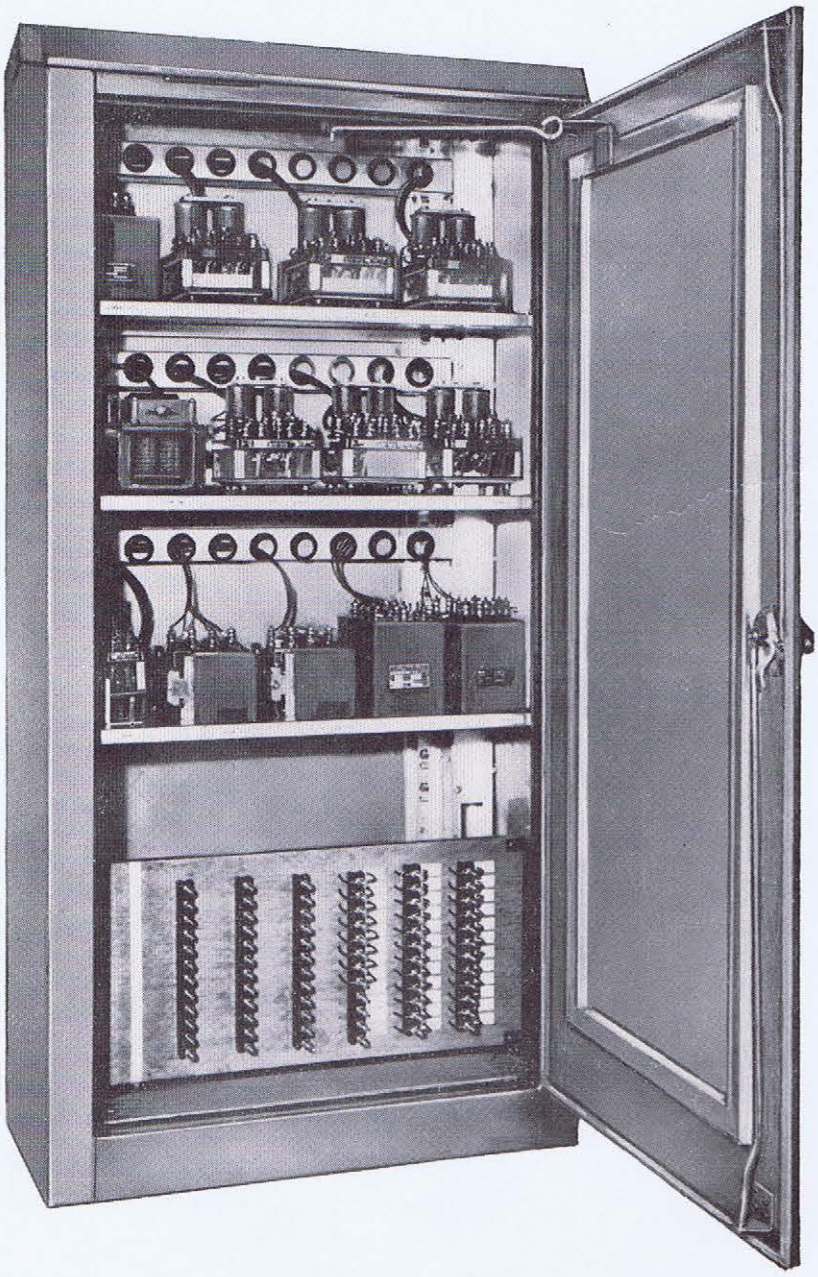

STANDARD SIZES

PL 180— 18″ wide—2 compartments
PL 200—3′-0″ wide—3 compartments
PL 300—3′-0″ wide—4 compartments
PL 600—6′-0″ wide—4 compartments
PL 900—9′-0″ wide—4 compartments

Improved Features

- All cases furnished with removable back doors
- Depth of cases has been increased to 22″
- All cases furnished with removable and adjustable shelves and chases
- Prices comparable to ordinary steel cases

Transcontrol Corp.

2 Yennicock Avenue, Port Washington, N. Y.

Reprinted from RAILWAY SIGNALING AND COMMUNICATIONS, August, 1960

TRANSCONTROL CORP.
PORT WASHINGTON, N.Y. 11050

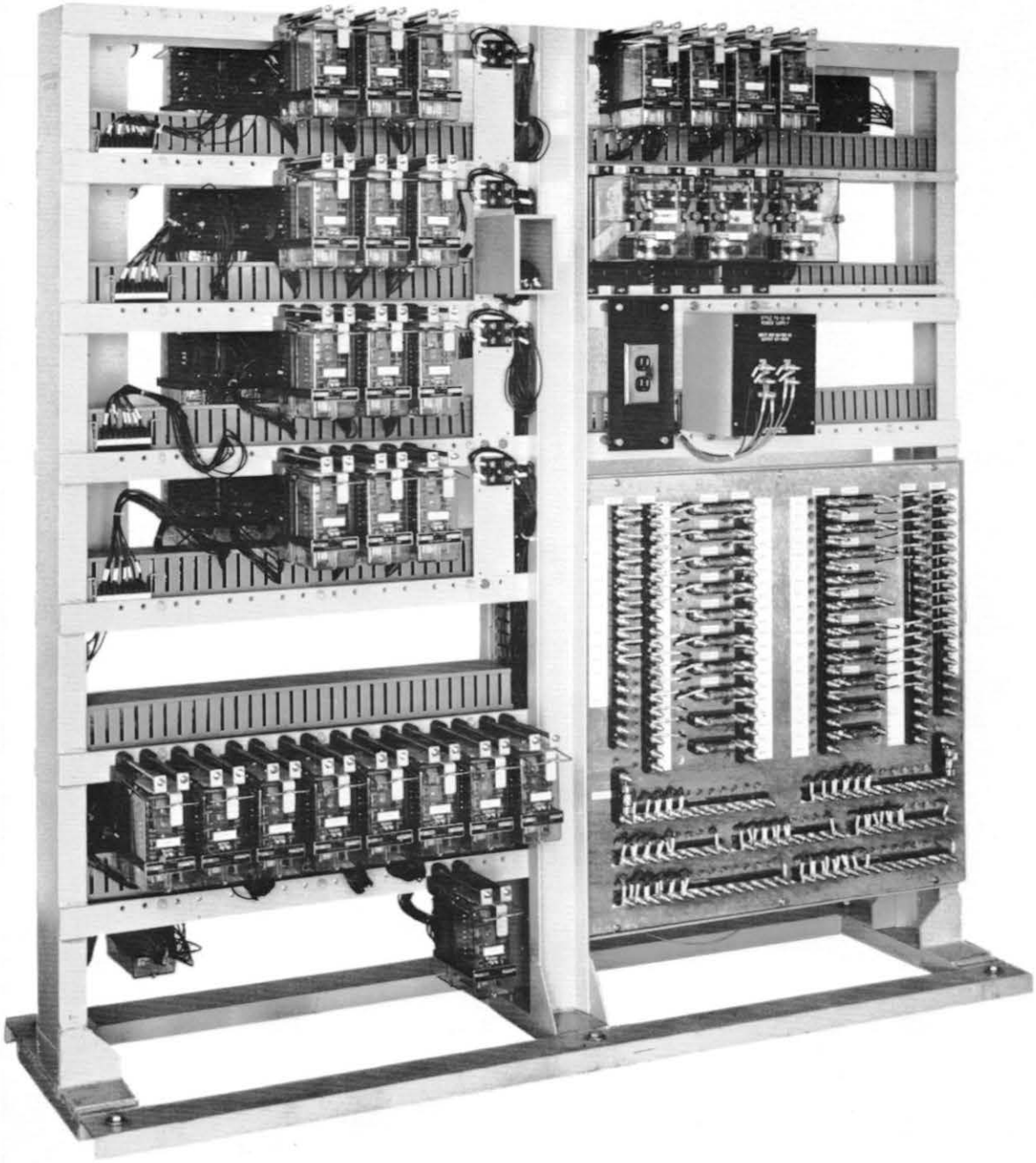

FACTORY WIRED RELAY RACK

FOR MUNI—METRO

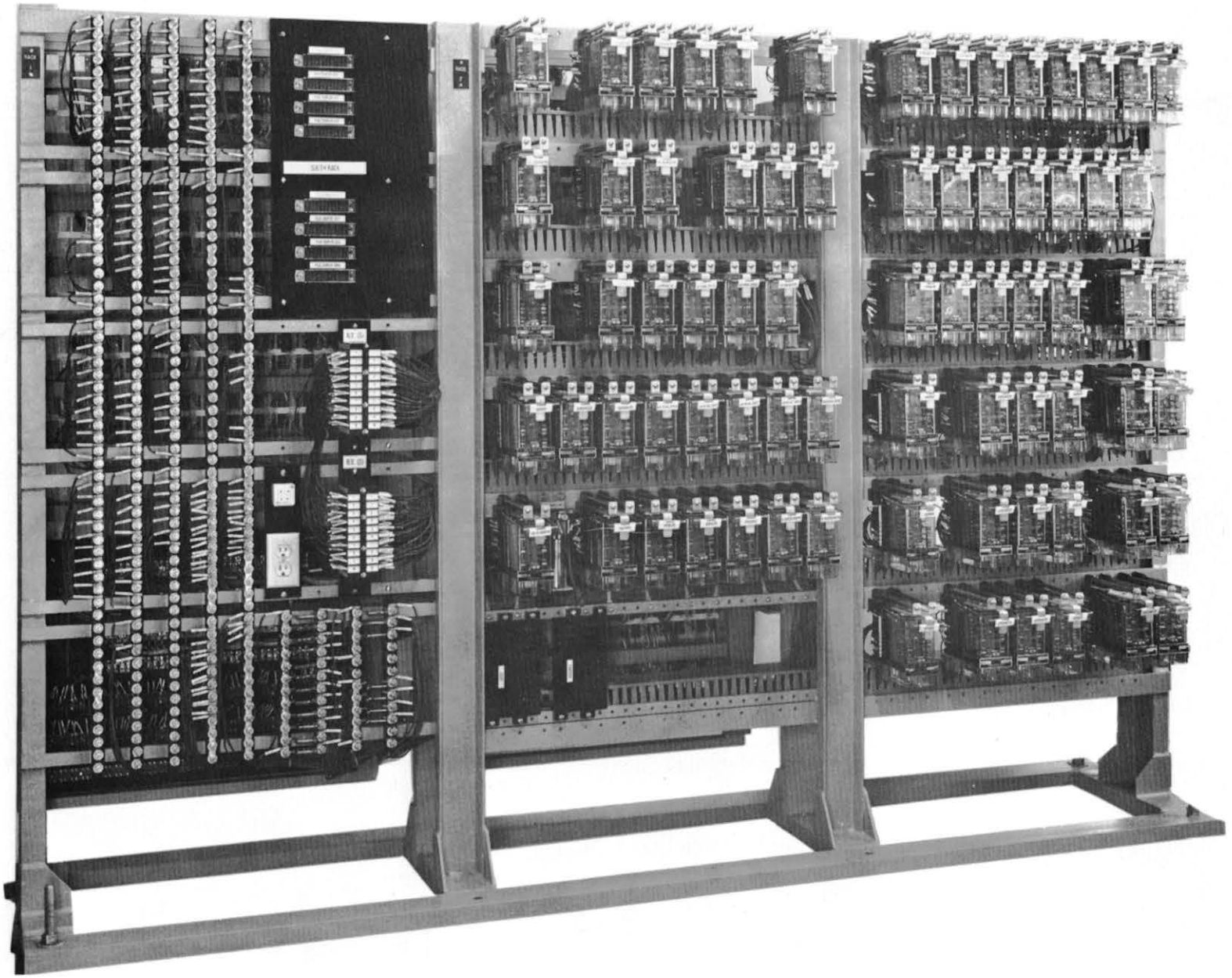

FACTORY WIRED RELAY RACK

FRONT VIEW (TORONTO TRANSIT SYSTEM)

TRANSCONTROL CORP.
PORT WASHINGTON, N.Y. 11050

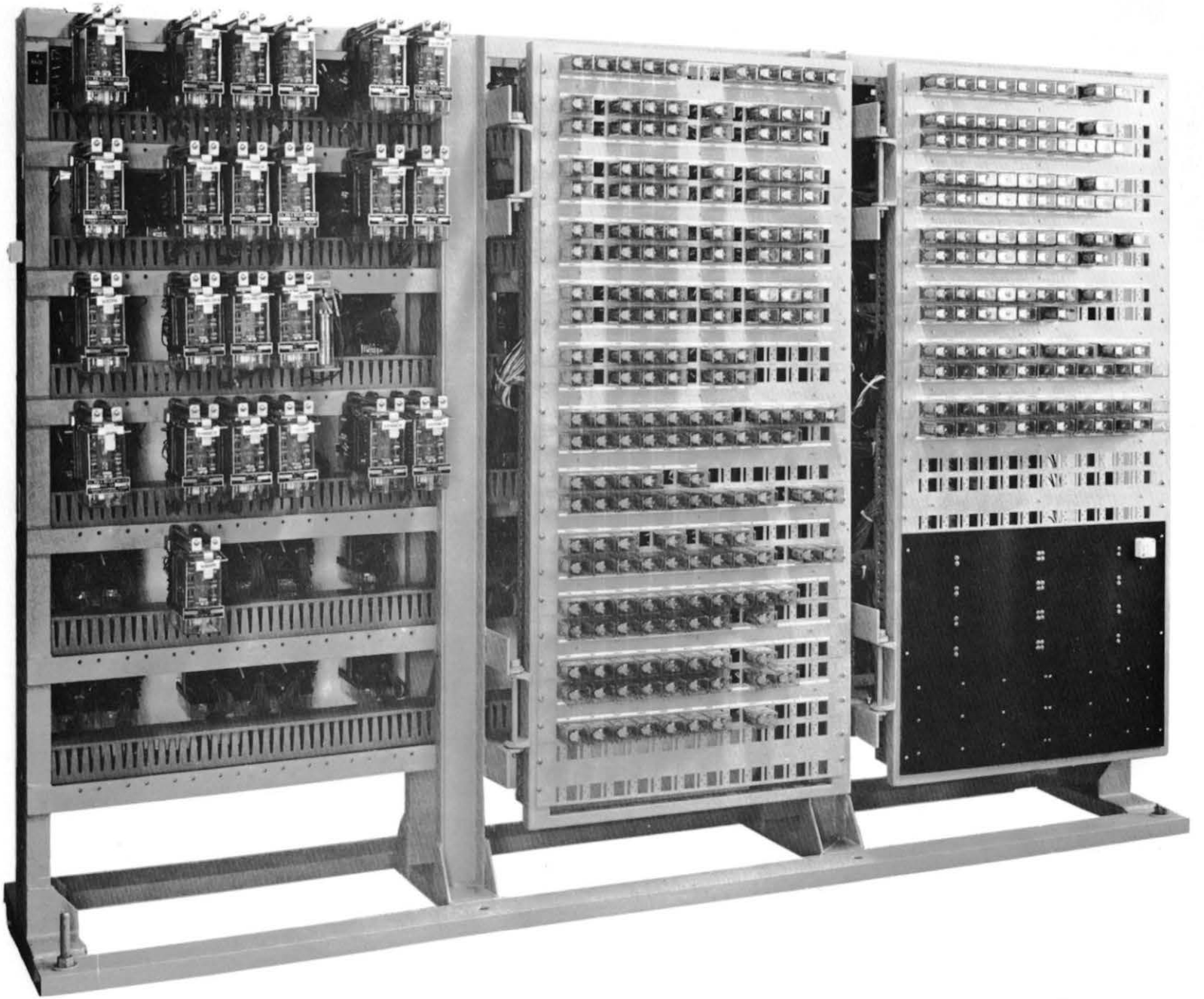

FACTORY WIRED RELAY RACK

REAR VIEW (TORONTO TRANSIT SYSTEM)

TRANSCONTROL CORP.
PORT WASHINGTON, N.Y. 11050

TRANSCONTROL CORP.
PORT WASHINGTON, N.Y. 11050

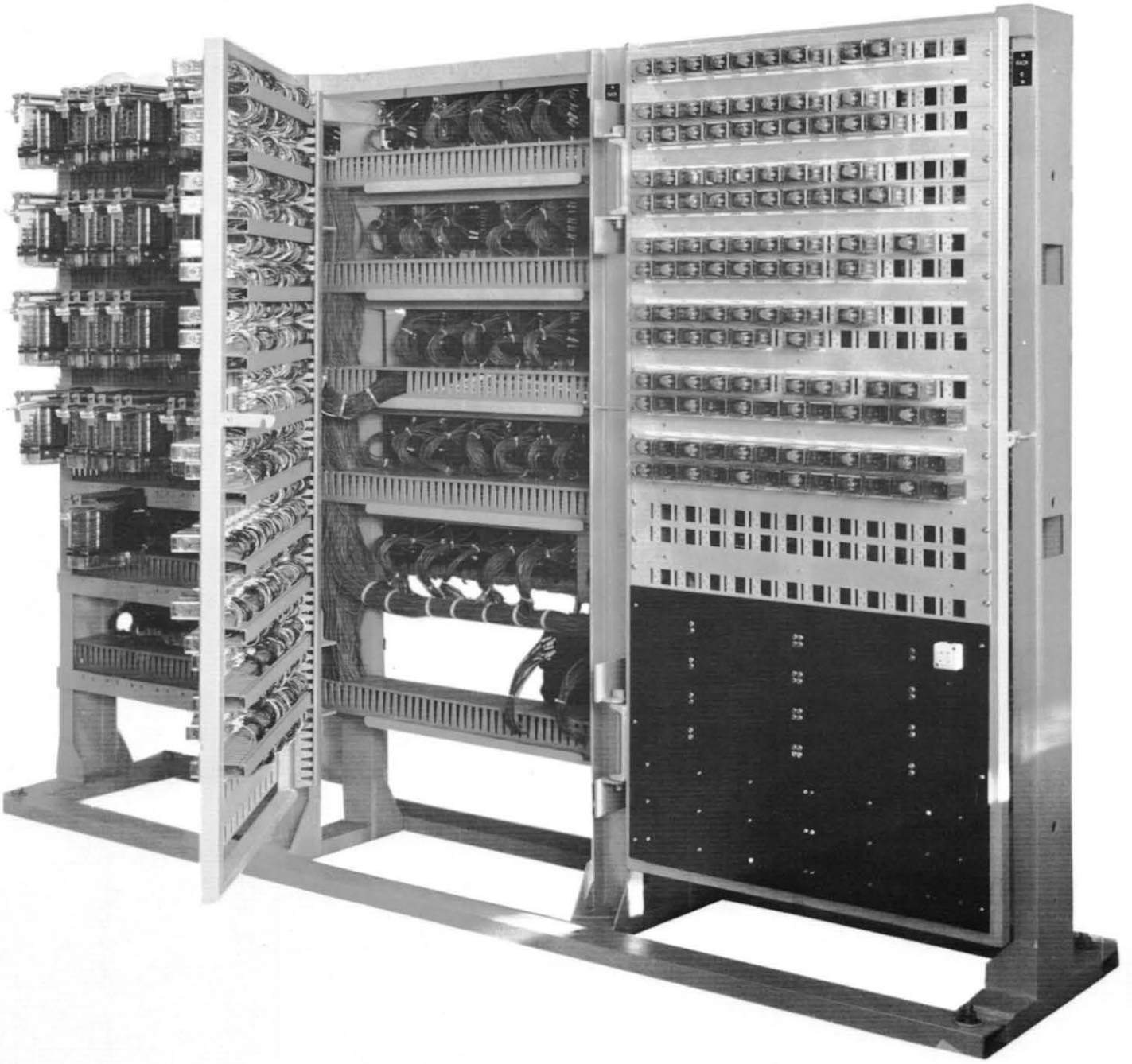

FACTORY WIRED RELAY RACK

NON VITAL SWING RACK OPEN (TORONTO TRANSIT SYSTEM)

TRANSCONTROL CORP.
PORT WASHINGTON, N.Y. 11050

FACTORY WIRED RELAY HOUSE

SHOWING FRONT SERVICED PD–1 & C1 RELAYS
(C.M. ST. P. & P. – SPAULDING)

TRANSCONTROL CORP.
PORT WASHINGTON, N.Y. 11050

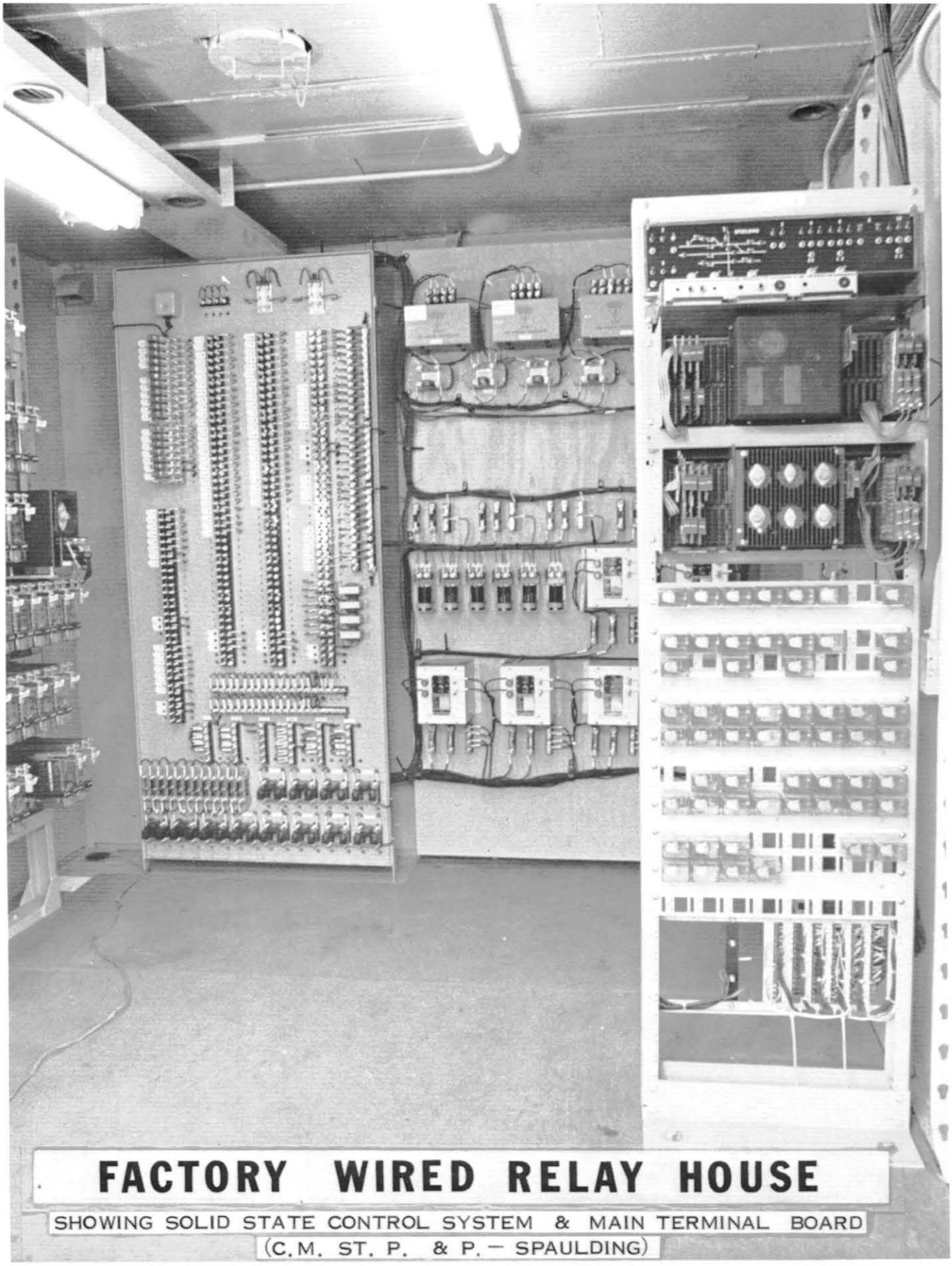

FACTORY WIRED RELAY HOUSE

SHOWING SOLID STATE CONTROL SYSTEM & MAIN TERMINAL BOARD
(C.M. ST. P. & P. — SPAULDING)

TRANSCONTROL CORP.
PORT WASHINGTON, N.Y. 11050

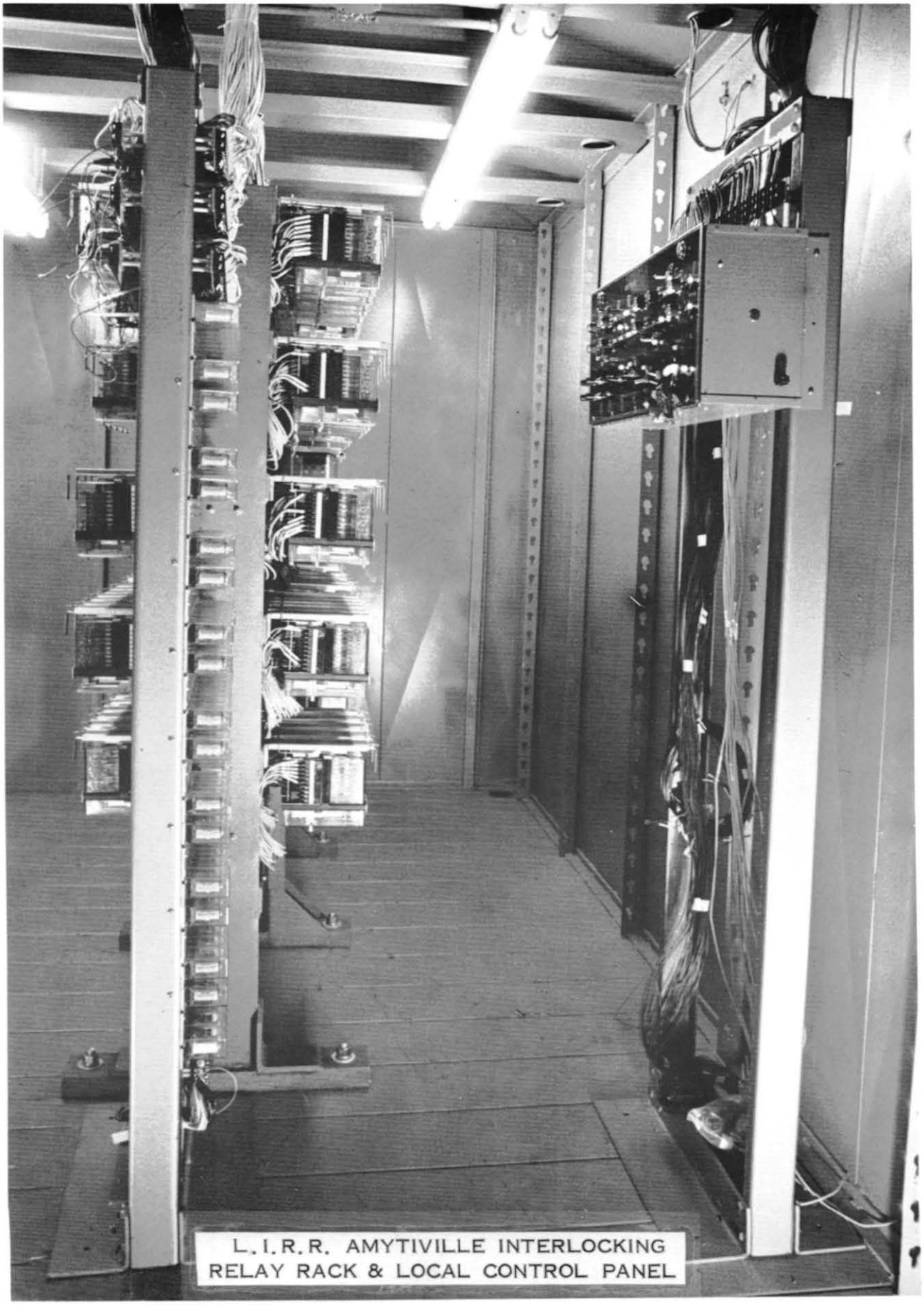

L.I.R.R. AMYTIVILLE INTERLOCKING
RELAY RACK & LOCAL CONTROL PANEL

TRANSCONTROL CORP.
PORT WASHINGTON, N.Y. 11050

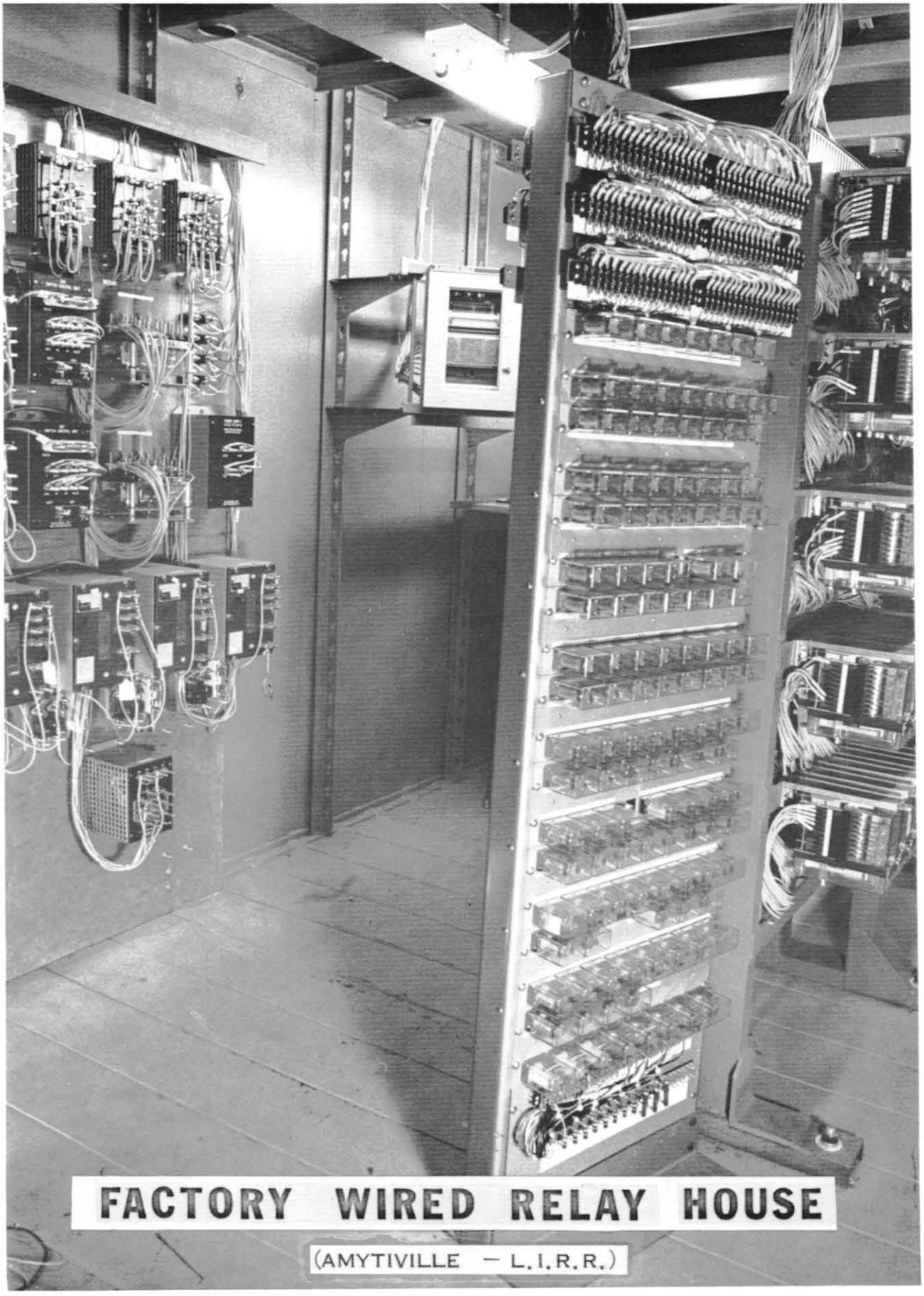

FACTORY WIRED RELAY HOUSE

(AMYTIVILLE – L.I.R.R.)

TRANSCONTROL CORP.
PORT WASHINGTON, N.Y. 11050

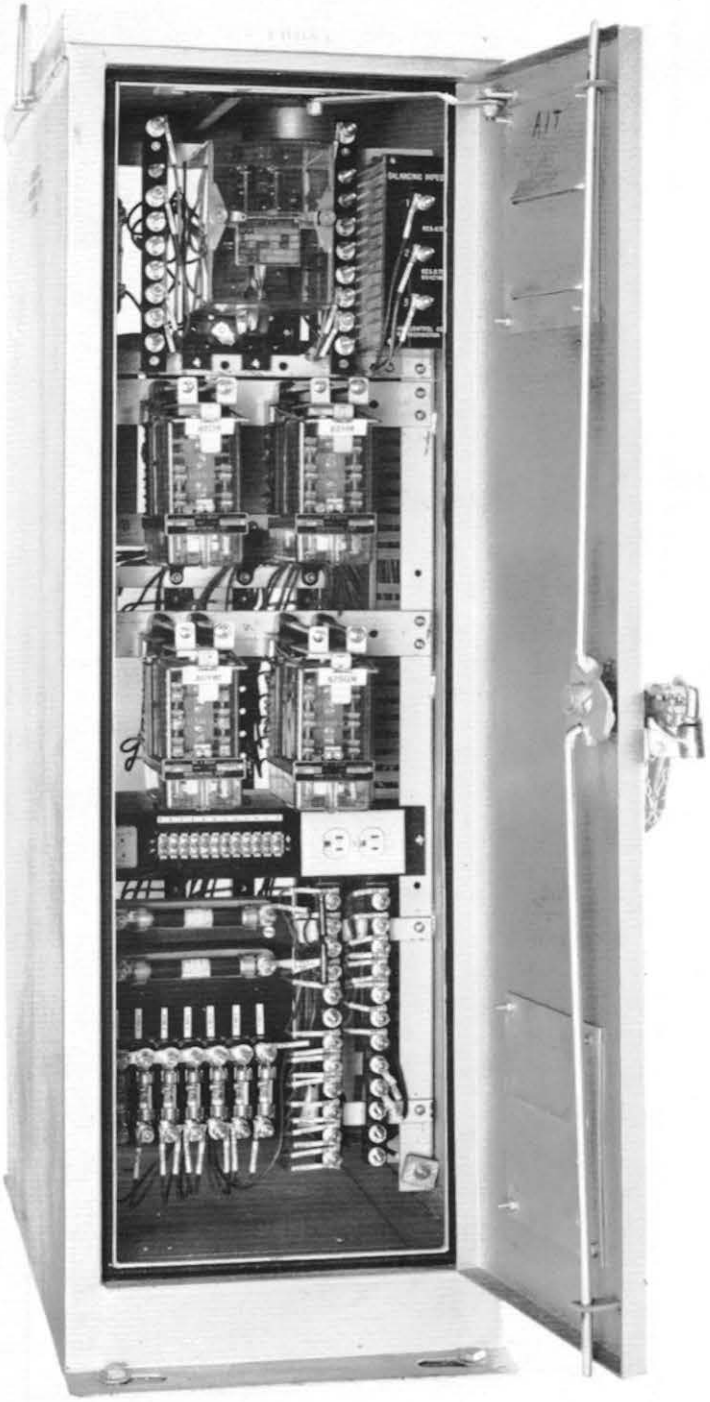

FACTORY WIRED WAYSIDE CASE

FOR TORONTO TRANSIT SYSTEM (FRONT VIEW)

TRANSCONTROL CORP.
PORT WASHINGTON, N.Y. 11050

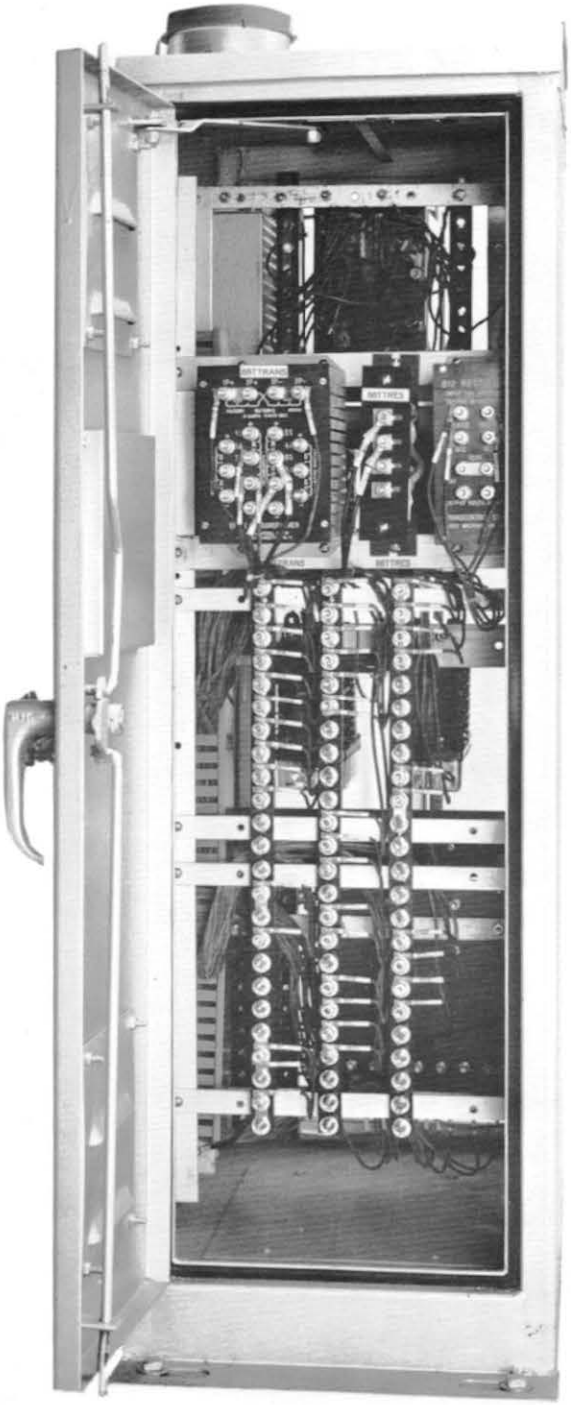

FACTORY WIRED WAYSIDE CASE

FOR TORONTO TRANSIT SYSTEM (REAR VIEW)

RAIL CONTACTORS

electromechanical treadles

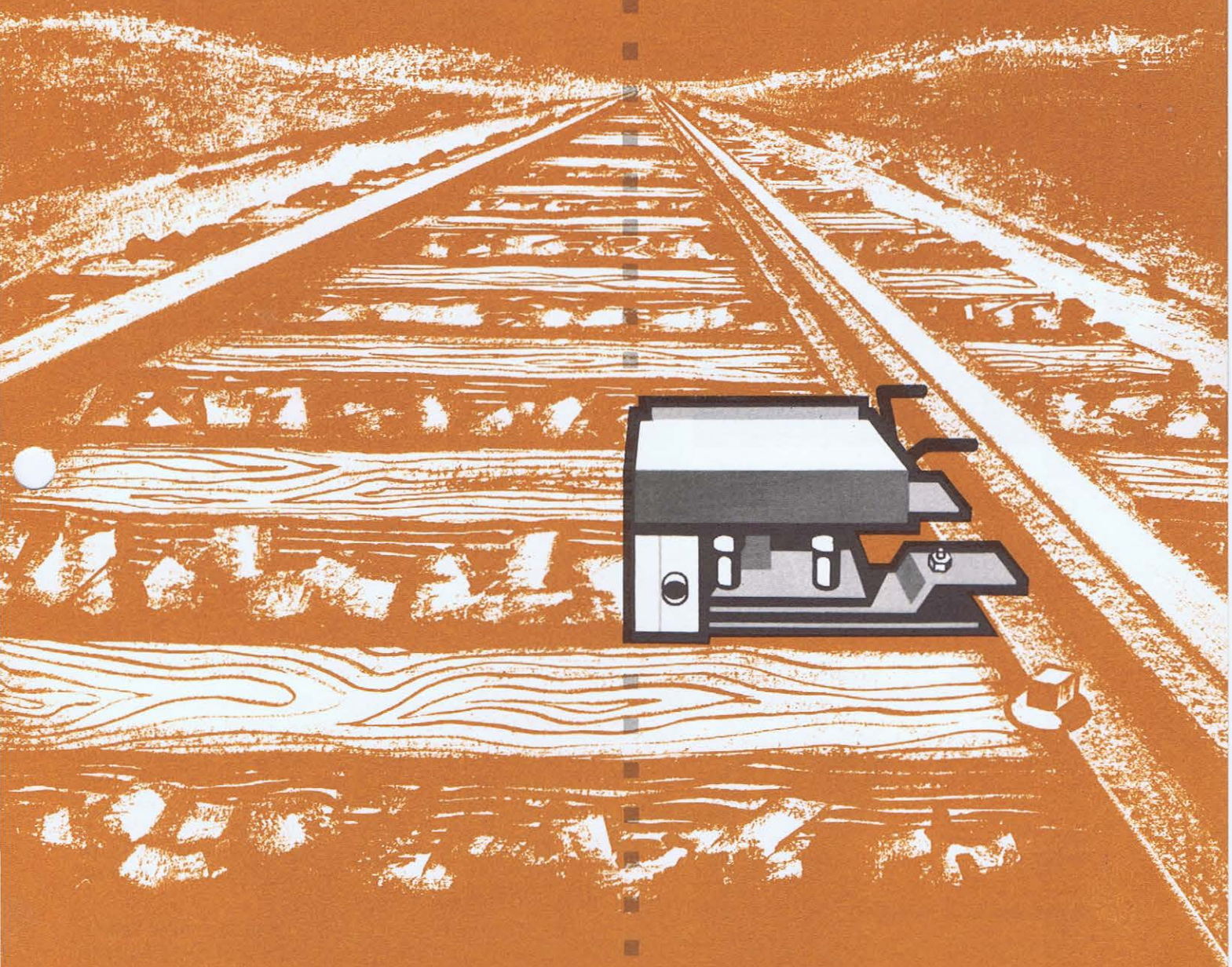

SILEC

SILEC

SIGNALISATION

Electromechanical treadles are employed for Railway Signalling. They were designed principally for the following applications :

- Automatic Train annunciation.
- Automatic road signals control at unprotected level crossings and control of automatic half-barriers in conjunction with track circuits.
- Approach Lighting of battery operation signals.
- Approach control of signals.
- Control of detonators.
- Check-in and check-out locking in conjunction with hand and automatic block equipment and point locking.
- Improvement of Track Circuits with poor shunting conditions (rusty rails or light stock).
- Axle Counting.

CHARACTERISTICS

SILEC electromechanical treadles are operated by the passage of trains.

By employing the principle of torsion shaft, Messrs. SILEC were able to design and accomplish SAFETY electromechanical treadle, because the torsion shaft has no inertion and permits elastic transmission of the movement of the operating arm without risk of breaking.

The quality of SILEC treadles has been achieved by careful design and development of individual components followed by high standard of production and constant rigid inspection and testing.

SOCIETE INDUSTRIELLE DE LIAISONS ELECTRIQUES 64 BIS, RUE DE MONCEAU PARIS VIII TEL:522-56-01

The high quality of SILEC treadles is maintained by careful setting of the following :

- dashpot timing to maintain contact operation for the desired time.
- shock absorber.
- automatic temperature compensation.
- high return torque.

The gold-silver contacts are protected by a sealed transparent cover to prevent unauthorised interference.

SILEC treadles are suitable for fail-safe signalling on lines with high speed trains as the operating time is only 0.003 seconds.

TYPES

SILEC produce two types of electromechanical treadles :

CAUTOR Single arm, non-directional.

FORFEX Double arm, direction sensitive.

CAUTOR Single arm treadle, has its contacts operated by passage of a train in both directions. The actuating arm is depressed by the passage of the first wheel and through a torsion shaft actuates a dashpot and two changeover contacts. The contacts are maintained in operated position until the entire train passes over the treadle. Timing adjustment on the dashpot ensures that the actuating arm is not operated by every wheel.

FORFEX Directional treadle is fitted with two actuating arms. The principle of operation is the same as for Cautor treadles. Each actuating arm acts upon its own dashpot and one changeover contact via a torsion shaft. Depending on the direction of traffic one or other contact set is operated. On request both contacts can be supplied for one direction of working the other being inoperative.

INSTALLATION

Treadles are mounted onto a flexible, resilient base which is directly fixed to the rail independent of the type of sleepers. (SILEC patent pending).

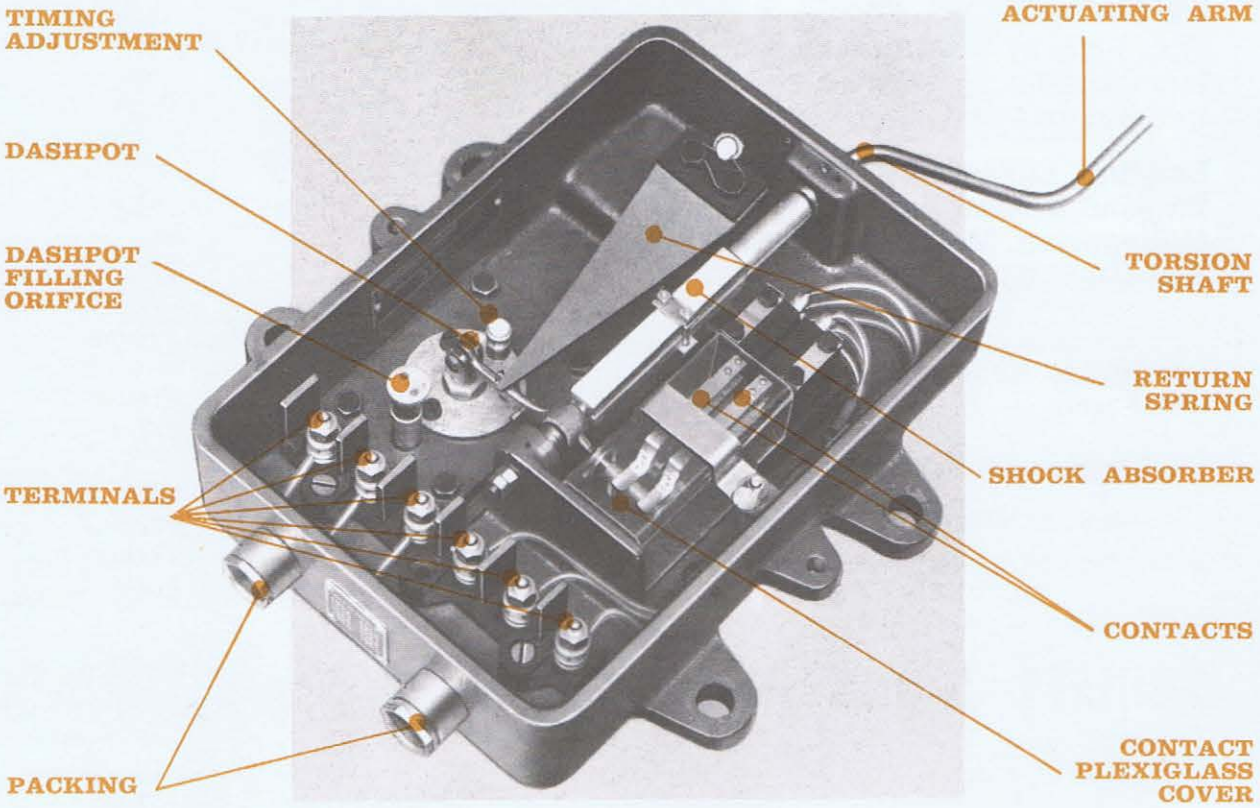

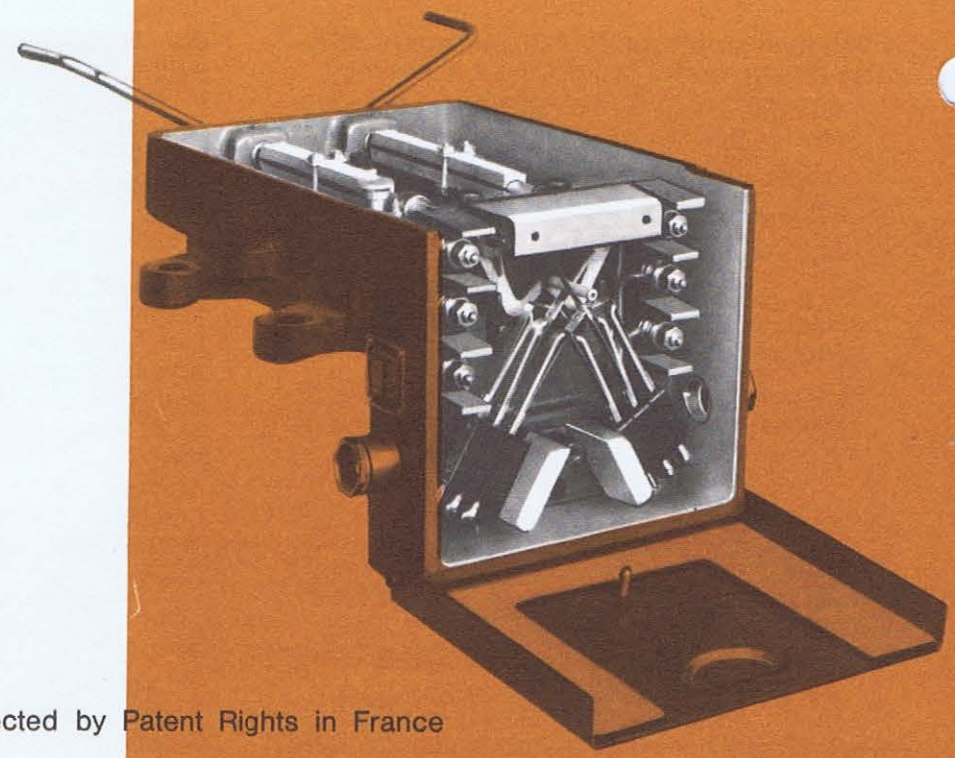

SILEC treadles are protected by Patent Rights in France and all over the world.

Their strength, reliability, simplicity of installation, maintenance and low cost resulted in a large demand :

180,000 are in service with S.N.C.F. (French National Railways).

and 250,000 are in service all over the world including S.N.C.F.

The Railway Authorities and industrial undertakings (Mining, private sidings) employ SILEC treadles in the following countries :

Belgium, Luxemburg, Switzerland, Italy, Sweden, England, Ireland, Algeria, Morocco, Tunisia, Congo, Madagascar, Malaysia, Formosa, Thailand, U. S. A. and Greece.

SILEC treadles have been successfully tested on the BORDEAUX-HENDAYE line holding the world speed record at 315 km/h.

OTHER DEPARTMENTS :

- **Cablework (electric cables and wires)**
- **Electronics (silicon semiconductors)**

SOCIÉTÉ ANONYME AU CAPITAL DE 18.000.000 F

SOCIÉTÉ INDUSTRIELLE DE LIAISONS ÉLECTRIQUES

64 bis, rue de Monceau
PARIS 8e - Tél : 522-56-01

Technipress - 735.95.04

SILEC

RAIL CONTACTOR

PARTNER TO THE TRACK CIRCUIT

LOW COST — RELIABLE

Over 100,000 in Service

Permissible top speed of vehicles 150 m.p.h.—Operating Time .003 Secs.

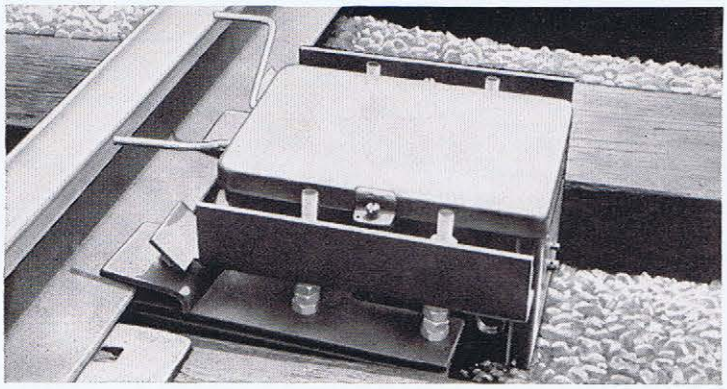

Typical Installation

Can Be Used For

1. Aid to the track circuit where bad shunting occurs.
2. Improving safety of automatic release of time locking.
3. Highway crossing circuits. SILEC detects motion or direction.
4. Check in—check out circuits.
5. Approach annunciation and lighting.
6. Control of illuminated curve restriction signs.
7. Release of electric lock.
8. Measuring speed.
9. Improve trap circuits.
10. Counting wheels for track fullness in retarder yards.
11. Starting circuits for test sections and hot box detectors.
12. Many other applications.

Ask for our typical circuits.

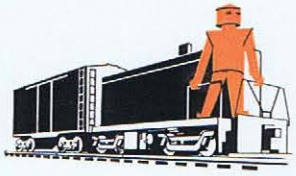

Manufactured by Silec Paris for

Transcontrol Corp.

Sole distributors—8 Sagamore Hill Drive, Port Washington, N.Y.
Tel. PO 7-4500

Reprinted from RAILWAY SIGNALING and COMMUNICATIONS, July 1957

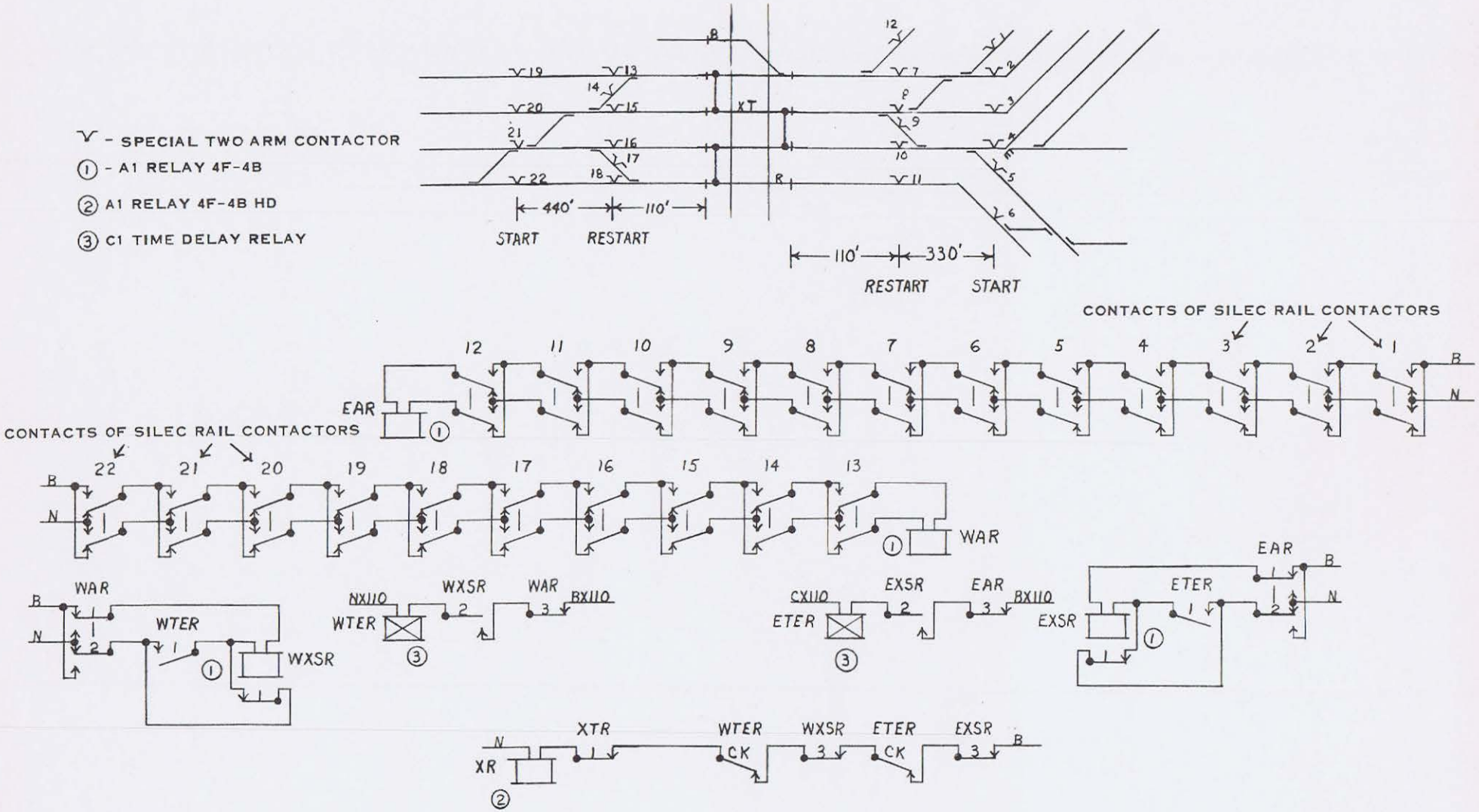

HIGHWAY CROSSING PROTECTION IN SWITCHING YARD
USING SILEC RAIL CONTACTORS

TRANSCONTROL CORP.
PORT WASHINGTON N.Y.
SK 182 9-20-61

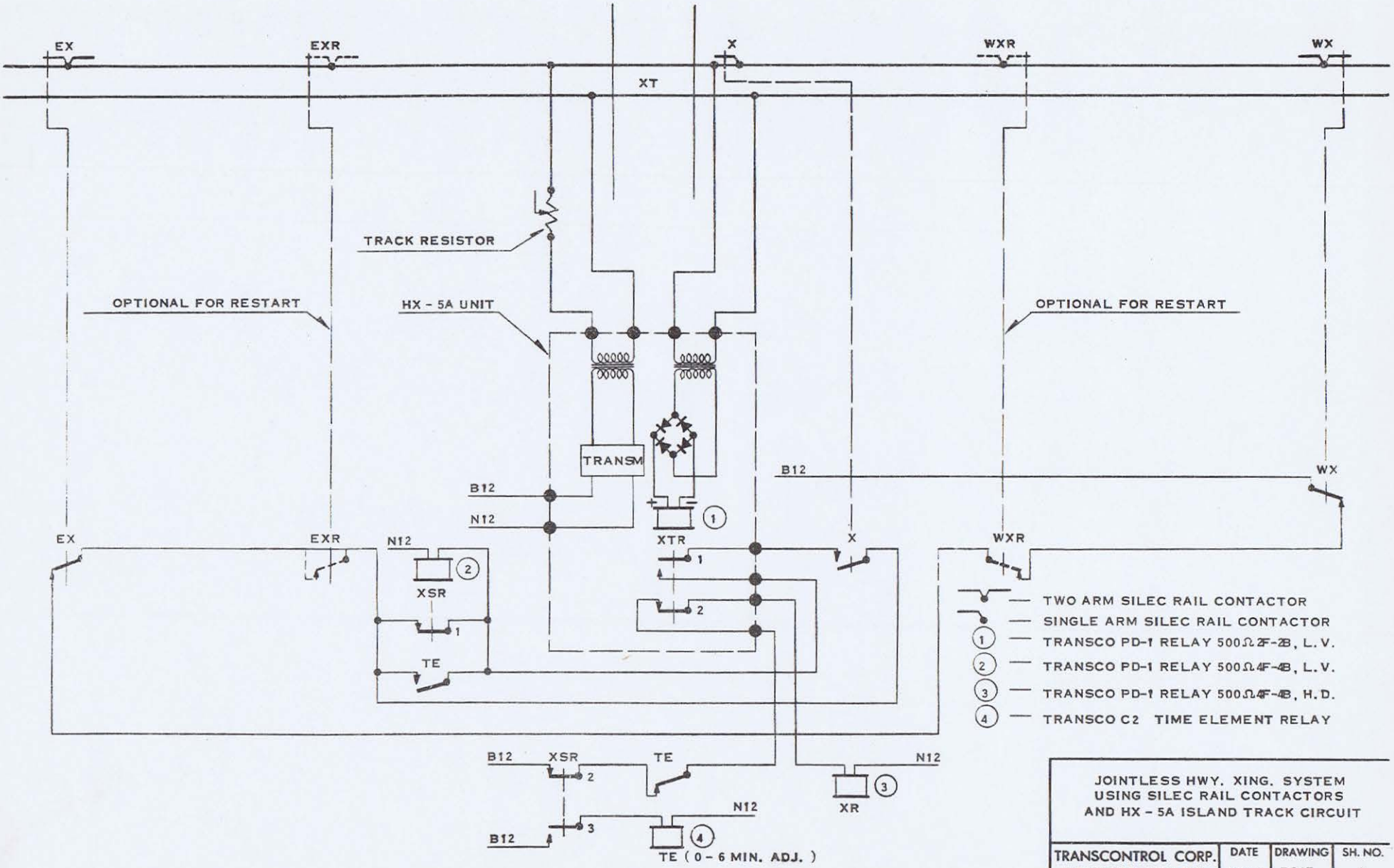

JOINTLESS HWY. XING. SYSTEM
USING SILEC RAIL CONTACTORS
AND HX - 5A ISLAND TRACK CIRCUIT

TRANSCONTROL CORP. PORT WASHINGTON, N.Y.	DATE	DRAWING	SH. NO.
	4.23.71	B207	1

Transcontrol A Siemens Company

April 5, 1982

Mr. Wayne R. Wilder
Engineer C & S
Uscola & Saginaw Bay Railway
538 E. Huron Avenue
Vassar, MI 48768

Dear Mr. Wilder,

Thank you for your response to our ad in the February issue of Modern Railroad regarding wheel detectors.

We hope that the enclosed data answers some of your technical questions. If you wish to discuss the various applications in greater detail, or wish to receive price and delivery information, please contact Mr. Robert Jahn, our Director of Marketing.

Sincerely,

S. Jenkins

(Ms.) Siegi Jenkins
Administrator, Mkt./Adv.

Mechanical Wheel Detector

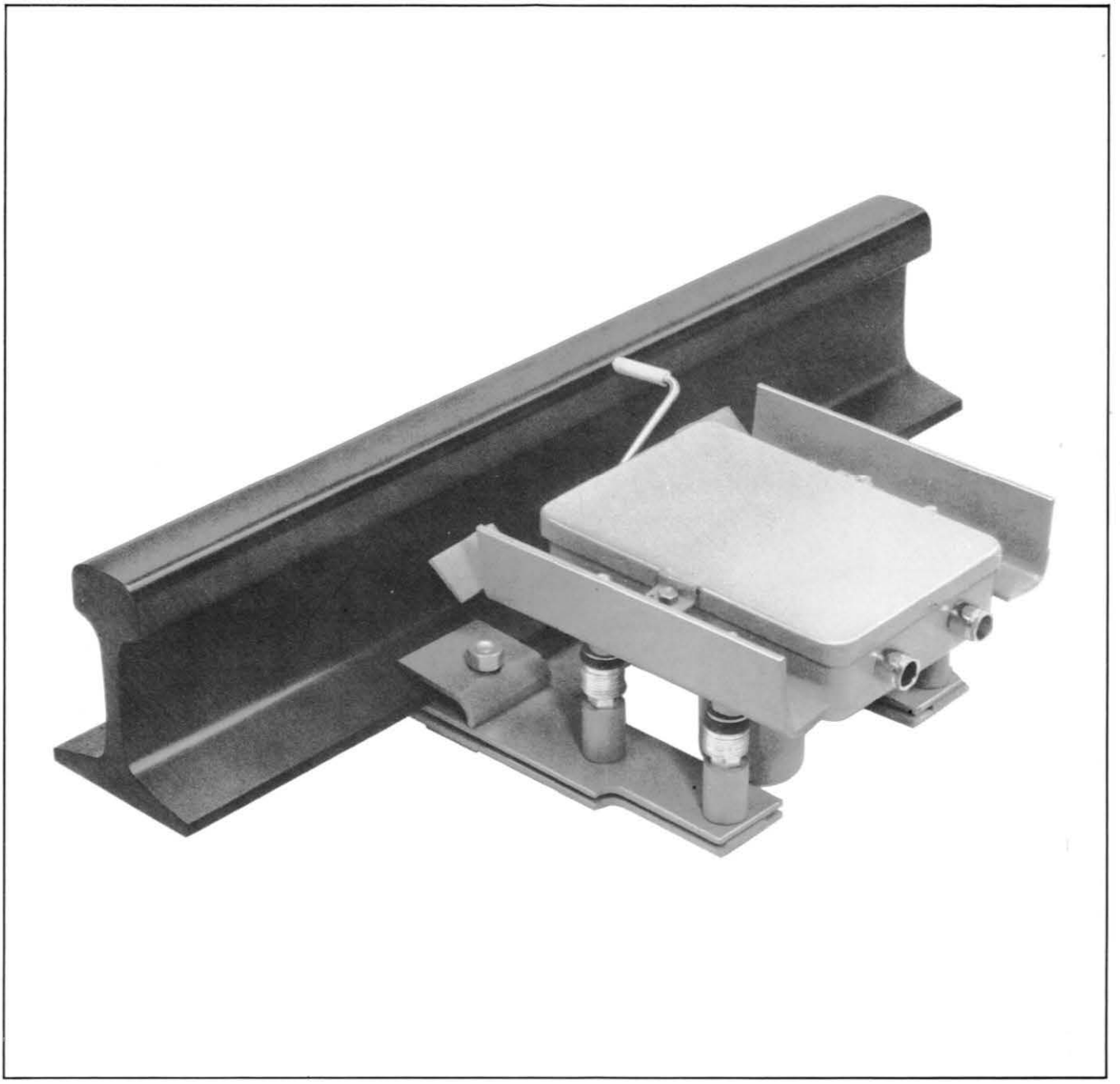

Transcontrol A Siemens Company

Mechanical Wheel Detector

General Features

- Actuated by wheel flange
- Single arm, non-directional
- Double arm, bi-directional
- Adjustable arm return delay (optional)
- Suitable for high speeds up to 150 mph
- Easy rail installation without drilling

Application

- Aid to track circuits where bad shunting occurs
- Highway crossing circuits
- Check-in Check-out circuits
- Release of electric lock
- Speed measurement
- Retarder yards, track fullness & wheel counting application
- Starting circuits for way scales and hot box detectors
- Many other applications

Electrical Characteristics

- Contact Arrangement: One-arm detector with two sets of front/back dependent contacts
- Minimum operating time: .003 sec.
- Contact rating (Ag-Ag): 4 amps non-inductive
- AAR terminals used for wire terminations

Back contacts normally closed. When the wheel actuates arm, back contacts open and front contacts close (cover removed)

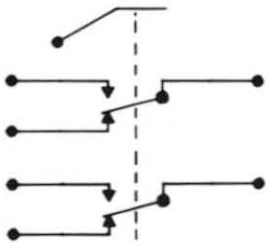

Fig. 1A

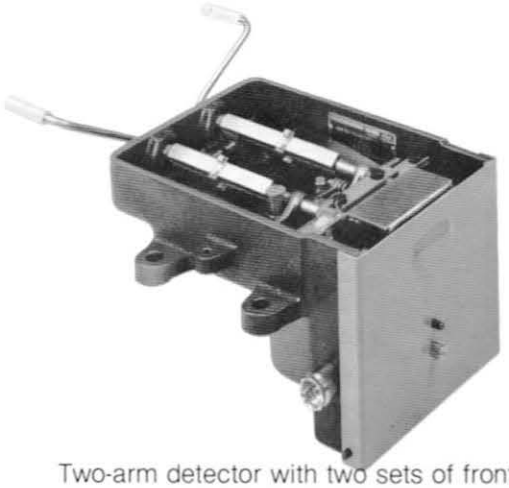

Two-arm detector with two sets of front/back dependent contacts (cover removed)

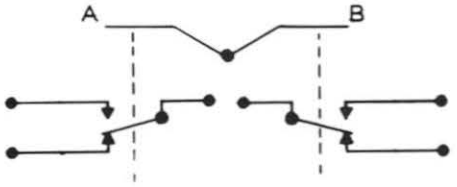

Fig. 2A
one set for each direction

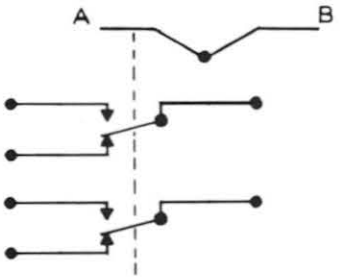

Fig. 2B
direction A to B

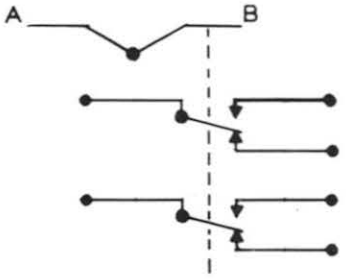

Fig. 2C
direction B to A

Mechanical Features

- Torsion shaft with shock absorber
- Rugged cast iron housing
- Easy maintenance
- All parts are corrosion proof or highly corrosion protected

Installation

Detailed installation instructions are provided with each unit

Order Information

Type	Part No.
Non-directional one arm wheel detector with adjustable arm return delay	98265005
Non-directional one arm without adjustable arm return delay	98265016
Directional two-arm wheel detector with adjustable arm return delay	98255005
Wheel detector mounting base	88265005
Fluid for adjustable arm time delay unit (1 pint)	13005019

Issued by Transcontrol Corporation, A Siemens Company
75 Marcus Drive, Melville, New York 11747 (516) 249-6000 TX 645117

CC/4800-005-121
ESP 2/81 Printed in U.S.A.

Magnetic Wheel Detector

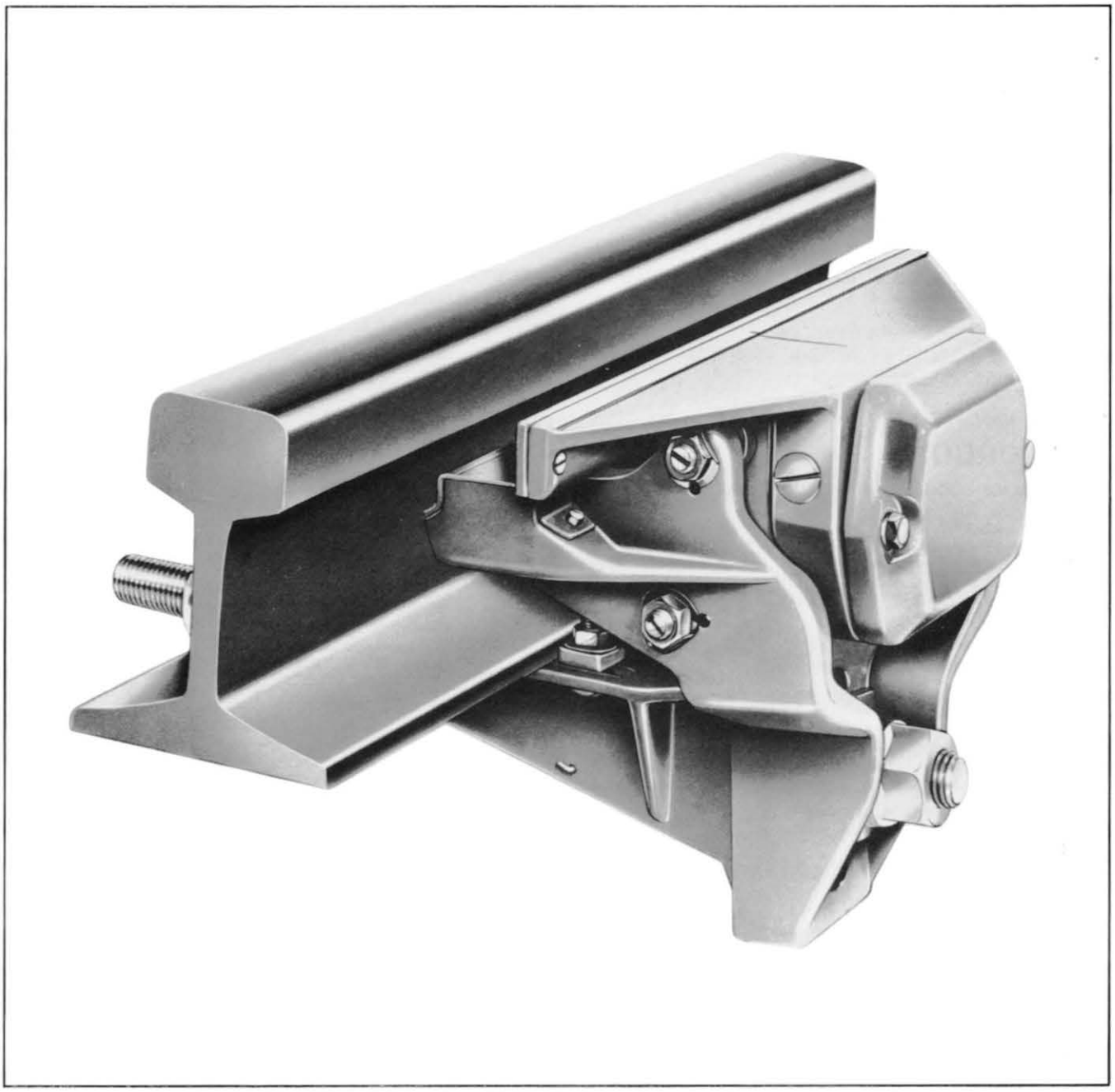

Transcontrol A Siemens Company

Magnetic Wheel Detector

General Features

- No power required to operate (magnetic shunting)
- Actuated by wheels from 0 mph
- Suitable for high speed operation
- Non-directional and bi-directional unit available
- Easy installation onto the rails, no drilling required
- High reliability
- Rugged construction
- Operating in temperature range −40°F to +180°F (−40°C to +82°C) relative humidity range 0 to 100%

Application

- Aid to track circuits where bad shunting occurs
- Highway crossing circuits
- Check-in Check-out circuits
- Release of electric lock
- Measuring speed
- Retarder yards, track fullness & wheel counting application
- Starting circuits for way scales and hot box detectors
- Many other applications

Electrical Characteristics Functions

The magnetic wheel detector consists of three major parts: the main magnet, the compensation magnet and the magnetic relay. All magnets are permanent magents. The flux of the main magnet secures the magnetic relay in its normal position. The compensation magnet has the opposite polarity and shifts the magnetic relay into the reverse position when shunting occurs. It is also used to tune the magnetic system. The magnetic relay has one independent front and one independent back contact.

Operation

When a wheel passes the magnetic field of the wheel detector, the wheel flange shunts the main magnet. The compensation magnet forces the magnetic relay to its reverse position. After the wheel has passed, the main magnet returns the relay to its normal position.

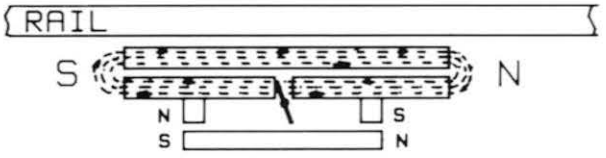

Fig. 1
Normal Position

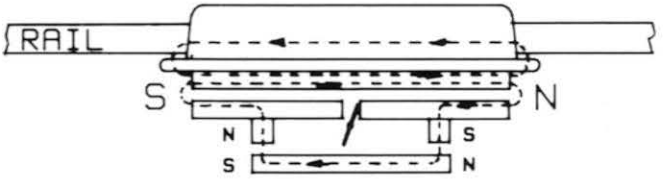

Fig. 2
Reversed Position

For bi-directional detection, the double magnetic wheel detector should be used. It consists of two magnetic circuits of opposite polarity and generates through double shunting two overlapping signals. The sequence and overlap of the two signals determine the direction of the wheel in all traffic configurations.

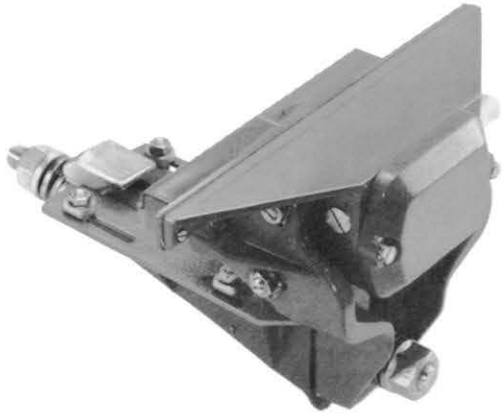

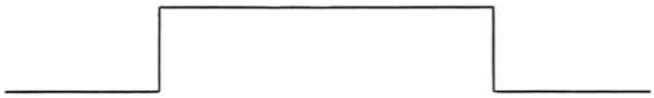

Fig. 3
Single Wheel Detector

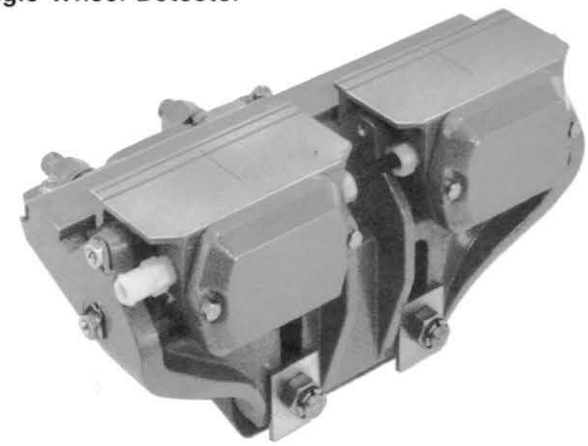

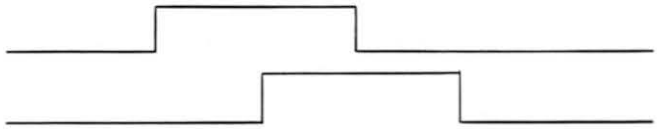

Fig. 4
Double Wheel Detector

Schematic Illustration

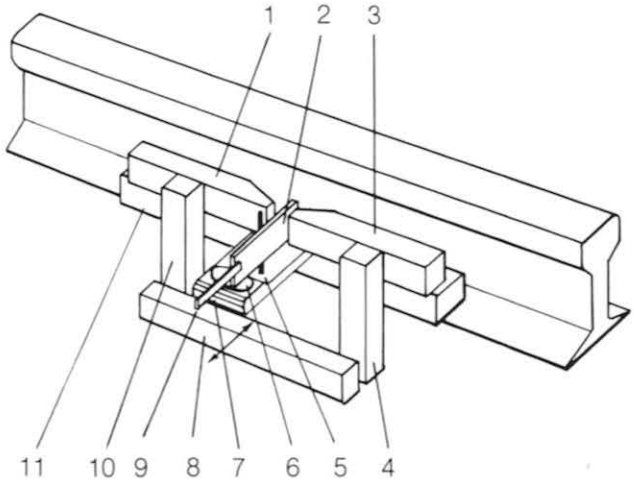

1. Pole
2. Armature
3. Pole
4. Compensating magnet
5. Axle
6. Interception plate
7. Polarizing magnet
8. Yoke
9. Contact spring
10. Compensating magnet
11. Main magnet

Installation

The magnetic wheel detectors are clamp mounted to the inner side of the rail, utilizing a universal mounting bracket. No drilling is required. Detailed installation instructions are provided with each unit.

For further information contact Transcontrol.

Order Information

Type (unit)	Part No.
Non-directional single magnetic wheel detector	88265016
Bi-directional double magnetic wheel detector	88255005
Parts	
magnetic relay (green)	87015543
magnetic relay (brown) for double wheel detector only	87015532
Tools & Accessories	
adjusting apparatus	68265016
mounting gauge	38285005

Issued by Transcontrol Corporation, A Siemens Company
75 Marcus Drive, Melville, New York 11747 (516) 249-6000 TX 645117

CC/4800-006-121
ESP 2/81 Printed in U.S.A.

Transcontrol
A member of the Siemens Group

Elgin, IL 60120
August 11, 1983

Mr. W, M, Wilder
Eng. Sigs. & Comm.
Tuscola & Saginaw Bay Ry. Co.
538 East Huron St.
Vassar, MI 48768

Dear Sir:

The Pneumatic Wheel Detector, as described in the enclosed brochure, is designed to insure highway crossing signal operation, by assisting in the shunting of the track circuits operating these signals. This Pneumatic Wheel Detector is weight responsive, so it can be used advantageously on light density rail lines, as well as on lines where the rolling stock is equipped with disc braking systems, or whenever erratic shunting of the conventional track circuit is encountered. Mounting of the Pneumatic Wheel Detector does not require the cutting or drilling of the rail and is available for the various sizes of rail in use.

The design of the Highway Crossing Power Pack, HX-1, will insure the reliable operation of the highway crossing signals, installed on light density rail lines, laid with jointed rail, which can readily accommodate insulated rail joints. The presence of a film or rust on the ball of the rail, due to infrequent train movements, does not adversely affect the performance of the HX-1 Unit. The rails are the only connecting link needed, between the limits of the approach circuits and the control point at the crossing, when using the HX-1 Unit. The ST-3 Rectifier which connects to the rails, at the limits of the approach circuits, is mounted on the ties, between the rails, in a protective housing.

After you have reviewed the enclosed brochures and if you would like more information, please feel free to contact me.

Thank You

Sincerely;

Erwin P. Kruk
Erwin P. Kruk
Sales Engineer

Pneumatic Wheel Detector

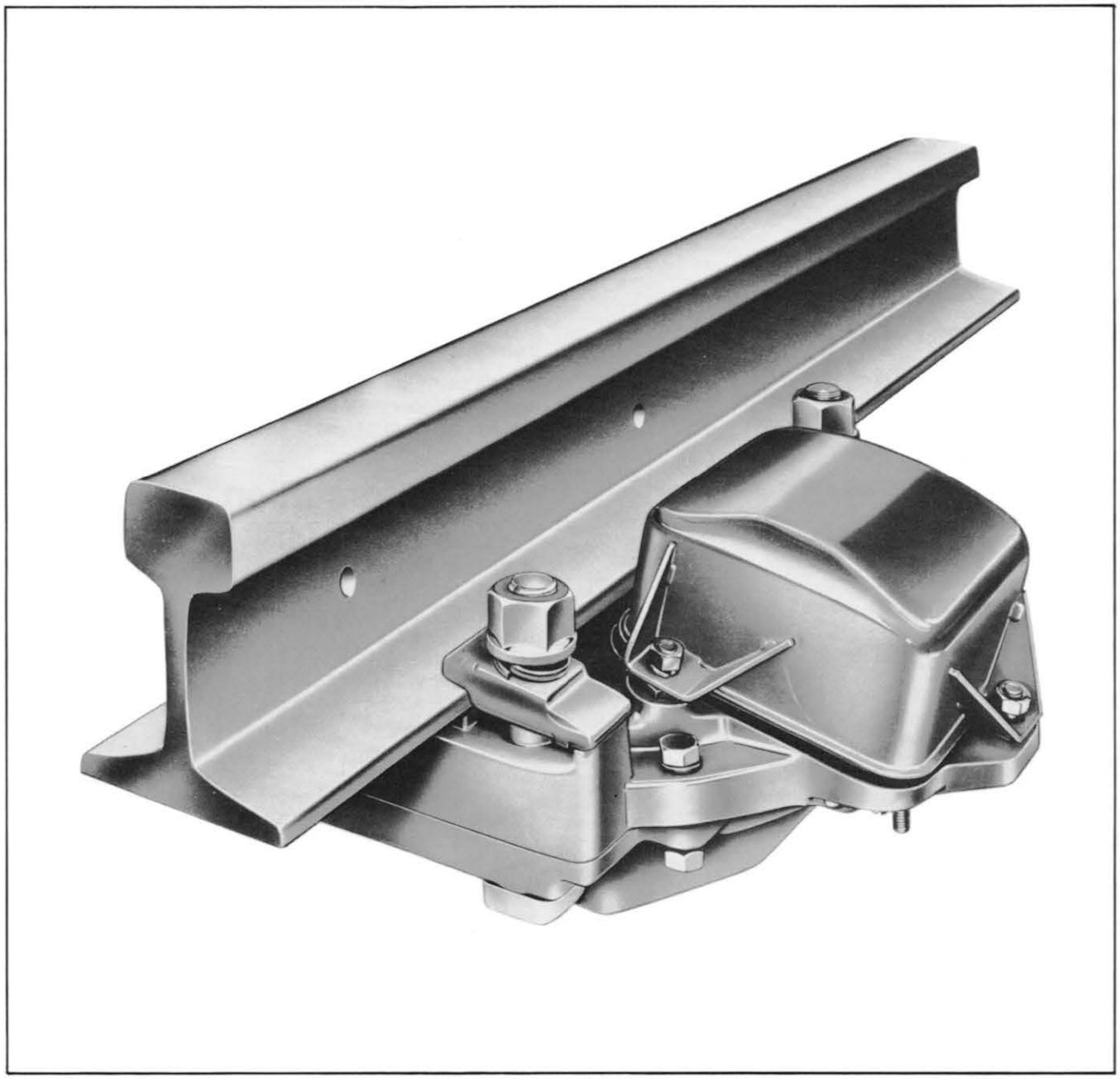

Transcontrol A Siemens Company

Pneumatic Wheel Detector

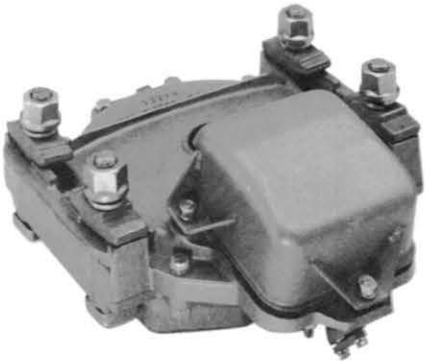

General Features

- No power required to operate
- Actuated by rail deflection
- Non-directional
- From approx. 3 mph to high speed operation
- Easy to install
- High reliability
- Rugged construction
- Operating temperature range −40°F to +180°F (−40°C to +82°C) relative humidity 0 - 100%

Application

- Aid to track circuits where bad shunting occurs.
- Highway crossing circuits
- Check-in Check-out circuits
- Release of electric lock
- Speed measurement
- Many other applications

The pneumatic wheel detector is activated by the downward pressure of a passing wheel.

The wheel causes a rail deflection which is monitored by a sealed unit located directly under the rail.

This application provides for a very low profile of the inside rail area, thereby reducing maintenance.

This under-the-rail feature makes the pneumatic detector ideal for poor track and extreme environmental conditions.

The detector is secured to the rail by adjustable clamps.

The detector unit is furnished with one set of type C contacts (dependent front/heel/back) rated for 7.5 W inductive load at 15 ms.

Order Information

Pneumatic Wheel Detector long delay for rail base sizes 111/118.5/136.5/144 mm S25000-Q9684-X18	88215038
Pneumatic Wheel Detector long delay for rail base sizes 129/136.5/144 mm S25000-Q9684-X27	88215027
Pneumatic Wheel Detector long delay for rail base sizes 114/121.5/129.5 mm S25000-Q9684-X45	88215016
Pneumatic Wheel Detector short relay for rail base sizes 114/121.5/129.5 mm S25000-Q9684-X46	88215005

Issued by Transcontrol Corporation, A Siemens Company
75 Marcus Drive, Melville, New York 11747 (516) 249-6000 TX 645117

CC/4800-004-121
ESP 2/81 Printed in U.S.A.

Electronic Wheel Detector

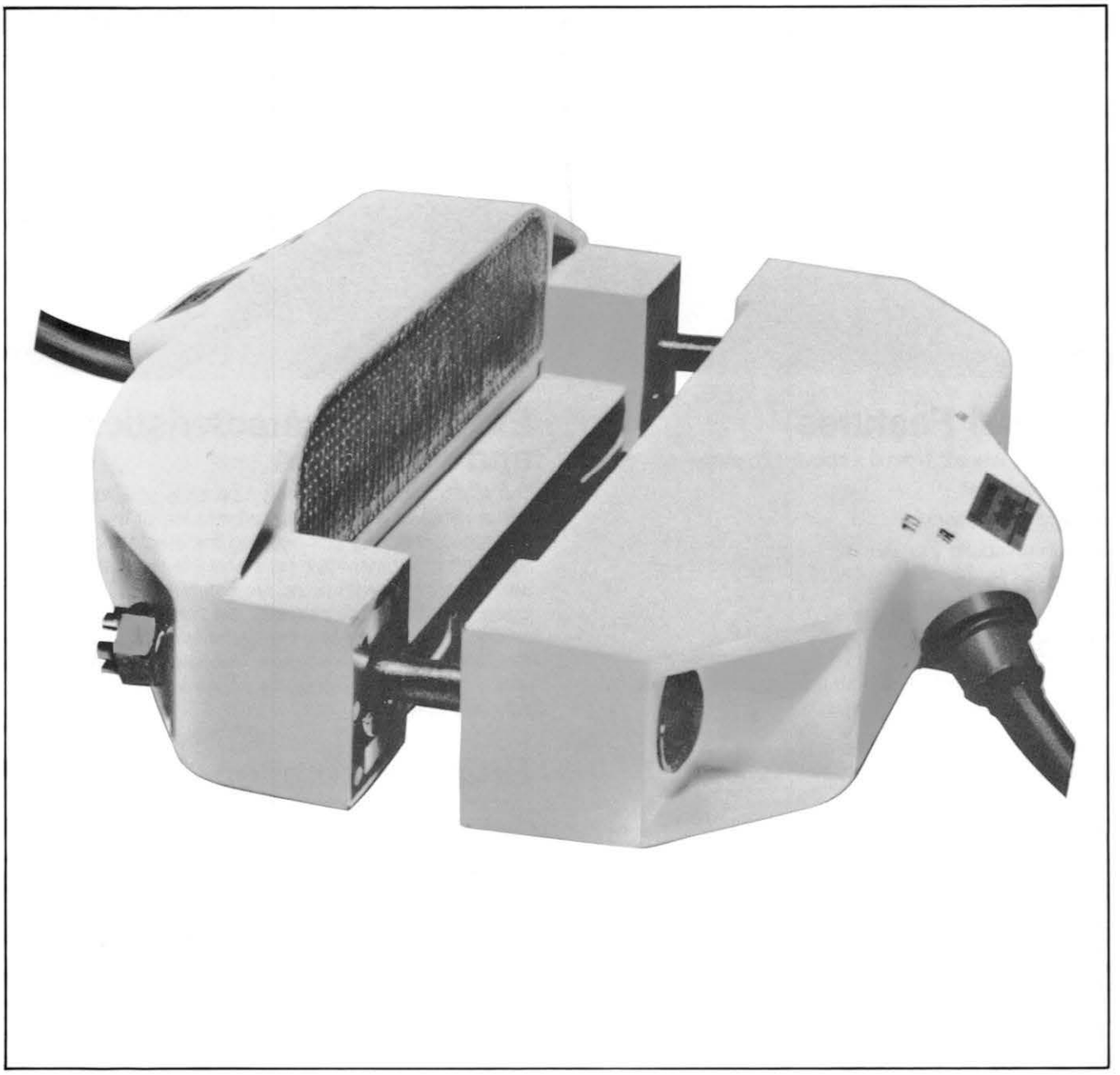

Transcontrol A Siemens Company

Electronic Wheel Detector

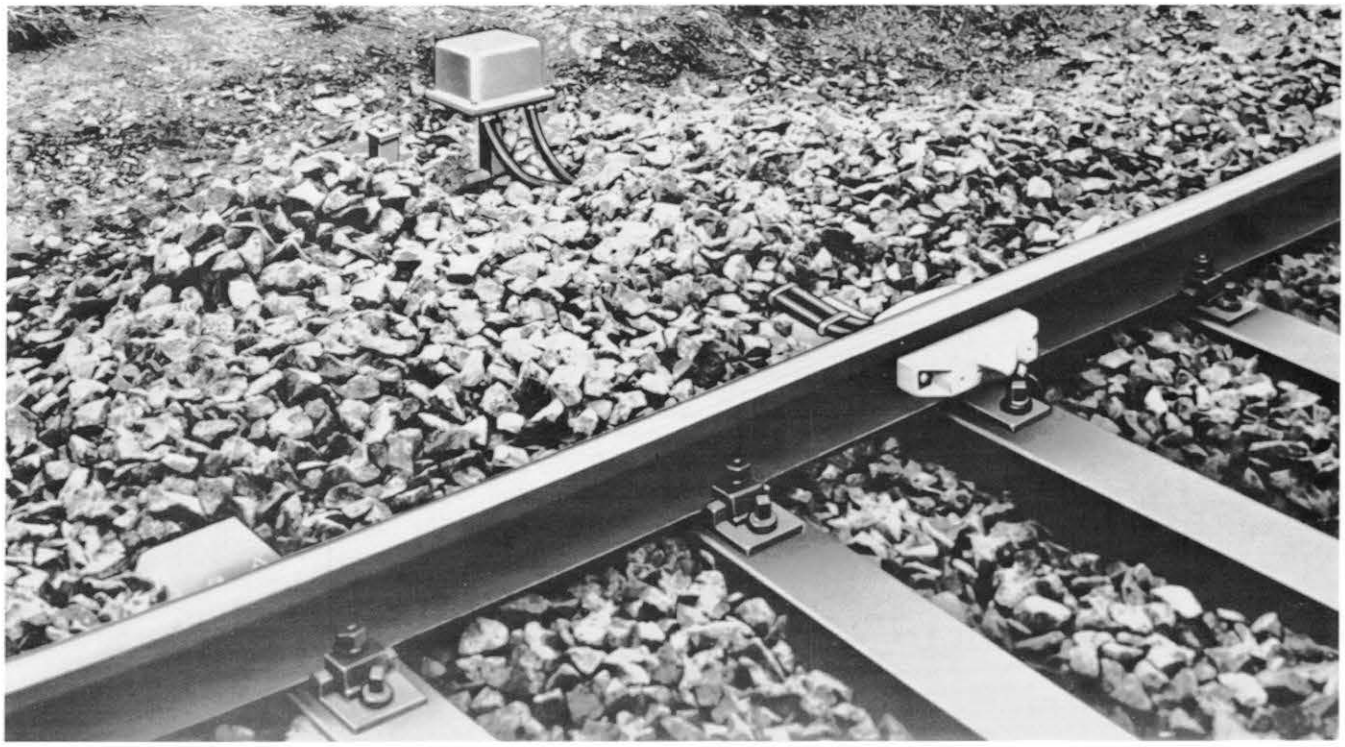

General Features

- Detects wheels from 0 - above 125 mph
- Bi-directional
- Easy installation
- High reliability
- Rugged design

Application

- Aid to track circuits where bad shunting occurs
- Highway crossing circuits
- Check-in-Check-out circuits
- Release of electric lock
- Measuring speed
- Retarder yards, track fullness & wheel counting application
- Starting circuits for way scales and hot box detectors
- Many other applications
- Counting axles

Electrical Characteristics and Functions

The electronic wheel detector consists of a transmitter and a receiver, mounted on either side of the rail, and a cable connecting box housing the electronics. Between the transmitter coils and the receiver coils, two electromagnetic fields are established. The presence of a wheel changes the coupling characteristics between the transmitter and the receiver coils. These changes are detected and processed by the electronics housed in the cable connecting box.

Order Information

Electronic Wheel Detector for rail web mount S25000-Q9684-E89	88205027
Electronic Wheel Detector for clamp mount S25000-Q9684-E87	88205016
Electronics with cable connecting box S25552-T2-A3	88205005

Issued by Transcontrol Corporation, A Siemens Company
75 Marcus Drive, Melville, New York 11747 (516) 249-6000 TX 645117

CC/4800-007-121
ESP 2/81 Printed in U.S.A.

TAGS & ACCESSORIES

inter-city

TRANSCONTROL CORP.
PORT WASHINGTON, N.Y. 11050

PD-2 FAIL SAFE SWITCH

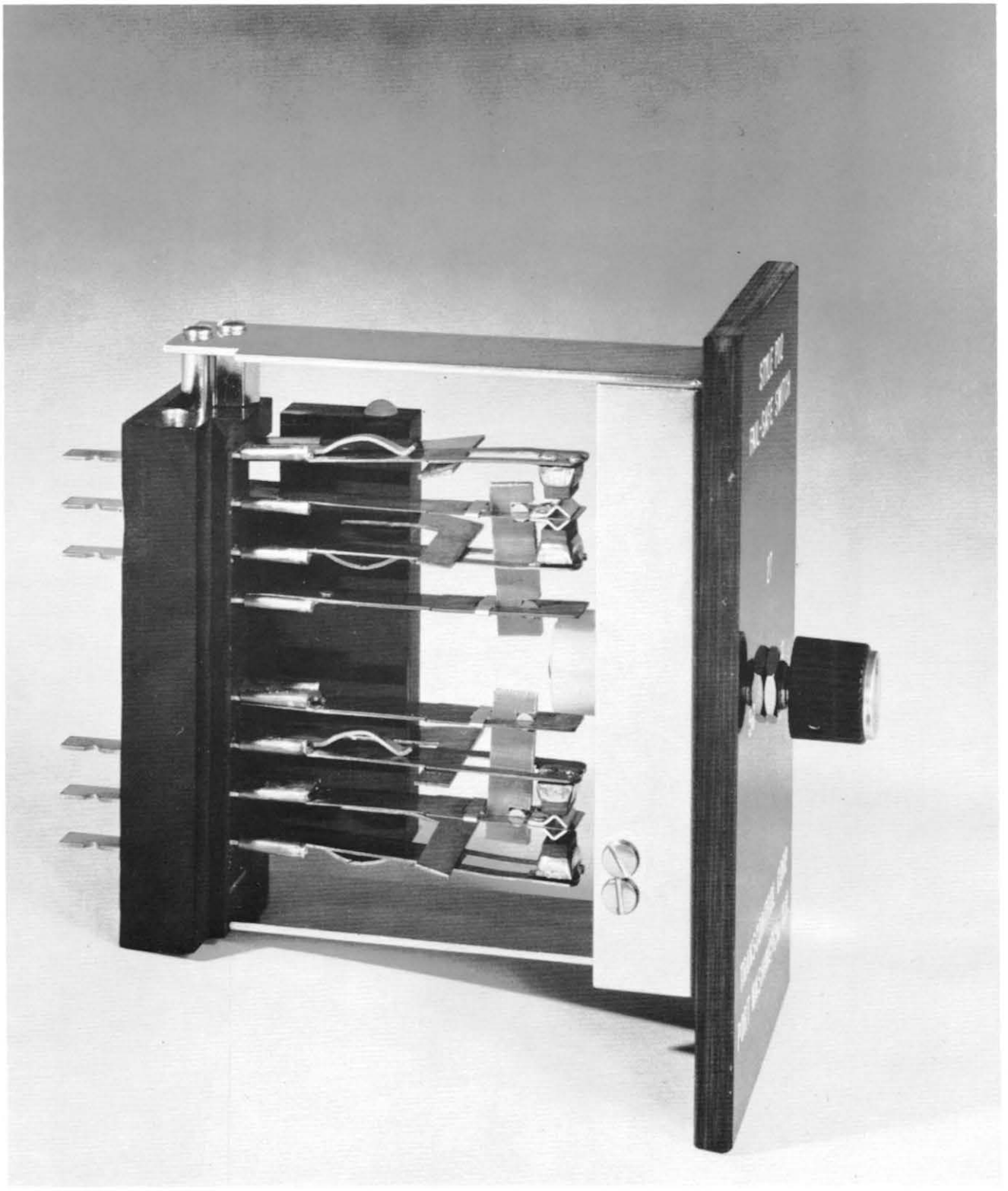

PD-2 FAIL SAFE SWITCH

WITH COVER REMOVED

TRANSCONTROL CORP.
PORT WASHINGTON, N.Y. 11050

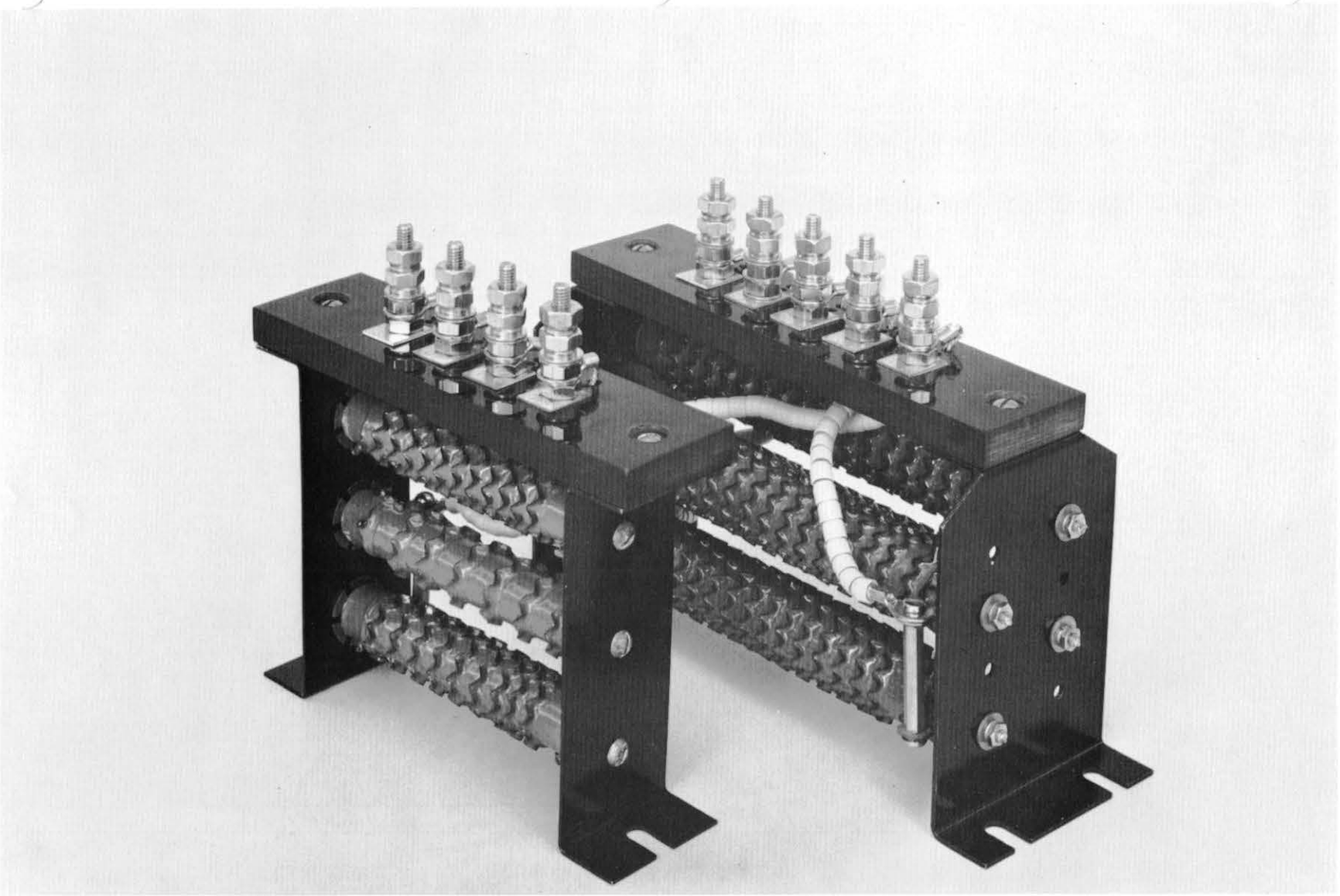

RE-1 & RE-2 ADJUSTABLE RESISTORS

FOR A.C. TRACK CIRCUITS

TRANSCONTROL CORP.
PORT WASHINGTON, N.Y. 11050

STYLE CSI SNUBBING CONDENSER

Can be furnished with 1000, 2000, or 3000 MFD.
Capacitor and with or without series resistor.

Transcontrol Corporation
2 YENNICOCK AVENUE PORT WASHINGTON, N. Y.

TRANSCO CS1 SNUBBING CONDENSER

TRANSCO CS1 Snubbing Condensers may be used in coded track circuit control to make code bridging decoders. They also may be used to delay a highway crossing start for several seconds in situations where an existing track circuit is near the desired start point, or if speed restrictions reduce the length of approach required.

The CS1 Snubbing Condenser is normally furnished with a series resistor to limit the charging current when the circuit is closed to the snubbed relay. The CS1 also is furnished without a resistor, to be used where other circuit protection prevents a high charging current.

DESCRIPTION	CATALOG NO.
CS1 Snubbing Condenser, 1000 Mfd., with 10 ohm series resistor	T11-010
CS1 Snubbing Condenser, 1000 Mfd.	T11-011
CS1 Snubbing Condenser, 2000 Mfd., with 10 ohm series resistor	T11-012
CS1 Snubbing Condenser, 2000 Mfd.	T11-013
CS1 Snubbing Condenser, 3000 Mfd., with 10 ohm series resistor	T11-014
CS1 Snubbing Condenser, 3000 Mfd.	T11-015
Condenser only, 1000 Mfd.	T11-016
Condenser only, 2000 Mfd.	T11-017
Condenser only, 3000 Mfd.	T11-018
Resistor, 10 ohm	T11-019

TRANSCO SNUBBING DEVICES

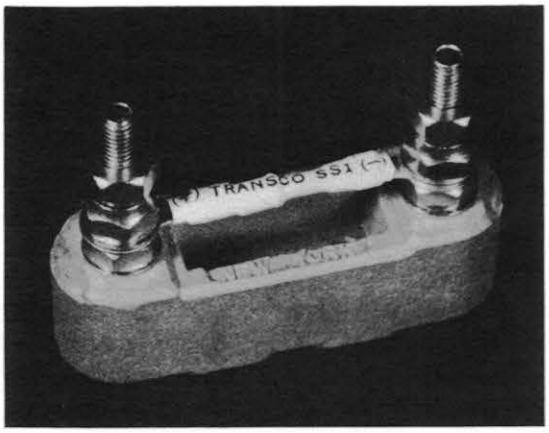

TRANSCO SS-1 Snubbing Rectifier Mounted on AAR Terminal..... $2.50

TRANSCO SS-1 Snubbing Rectifier for Mounting Directly on Control Terminals of 4 Point and 6 Point Relays.....$1.75

TRANSCO RS-1 Snubbing Resistor for Mounting Directly on Control Terminals of 4 Point and 6 Point Relays..... $0.75

Transcontrol Corporation

2 YENNICOCK AVENUE PORT WASHINGTON, N. Y.

TRANSCO SS-1 SNUBBING RECTIFIER

TRANSCO SS-1 Snubbing Rectifiers may be used for relay or motor snubbing or for circuit isolation not exceeding the 600 volt, 1.5 ampere rating of the device.

Stamped shrink tubing aids identification and proper circuit connection. The SS-1 is available for mounting on AAR terminal blocks, across shelf relays or across PD1 plug-in type relays.

DESCRIPTION	CATALOG NO.
SS-1 Snubbing Rectifier mounted on AAR Terminal Block	T11-030
SS-1 Snubbing Rectifier with terminals for mounting on AAR Terminal Block	T11-031
SS-1 Snubbing Rectifier for mounting directly on control of 4 point or 6 point shelf relays	T11-032
SS-1 Snubbing Rectifier for mounting directly on controls of PD1 Relay	T11-033

TRANSCO RS-1 SNUBBING RESISTOR

TRANSCO RS-1 Snubbing Resistors are 2 watt, 10% Composition resistors covered with stamped shrink tubing to insulate and aid identification. Ring type terminals or Faston type terminals are provided. An RS-1 Snubbing Resistor of a proper value across the coil of a relay will snub the coil so that the armature will not drop out during the transfer of a controlling contact. An RS-1 will also reduce the inductive spike produced when the circuit to the coil is opened, thus reducing arcing and interference to solid state systems.

RS-1 Snubbing Resistors are available in the following values. Please specify when ordering.

10	27	68	180	470	1.2K	3.3K
12	33	82	220	560	1.5K	3.8K
15	39	100	270	680	1.8K	4.7K
18	47	120	330	820	2.2K	5.6K
22	56	150	390	1K	2.7K	6.8K

DESCRIPTION	CATALOG NO.
RS-1 Snubbing Resistor mounted on AAR Terminal Block	T11-040
RS-1 Snubbing Resistor with terminals for mounting on AAR Terminal Block	T11-041
RS-1 Snubbing Resistor for mounting directly on control of 4 point or 6 point shelf relays	T11-042
RS-1 Snubbing Resistor for mounting directly on control of PD1 Relay	T11-043

T-1 TEST TERMINAL

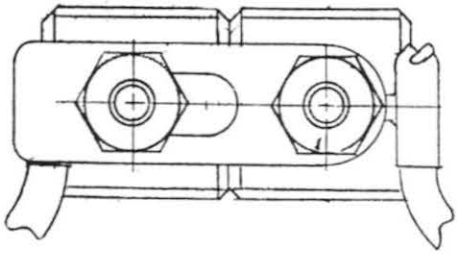

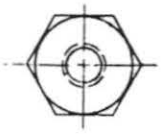

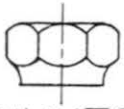

A-SILVER PLATED NUT

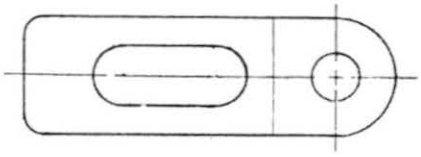

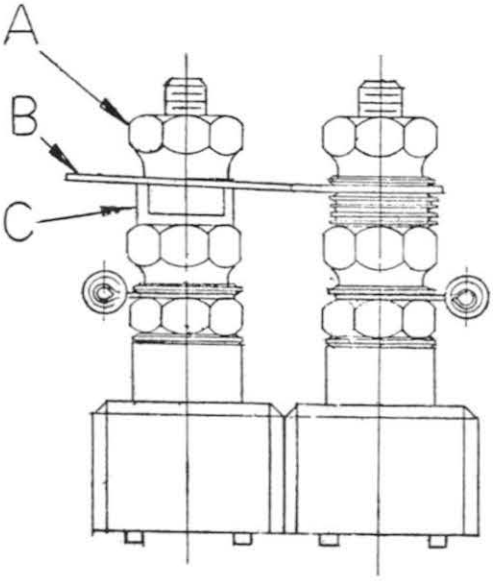

B- BLADE

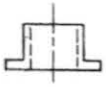

C-INSULATING BUSHING

PL-101

Transcontrol Corporation

2 YENNICOCK AVENUE PORT WASHINGTON, N. Y.

MATERIAL: VINYL

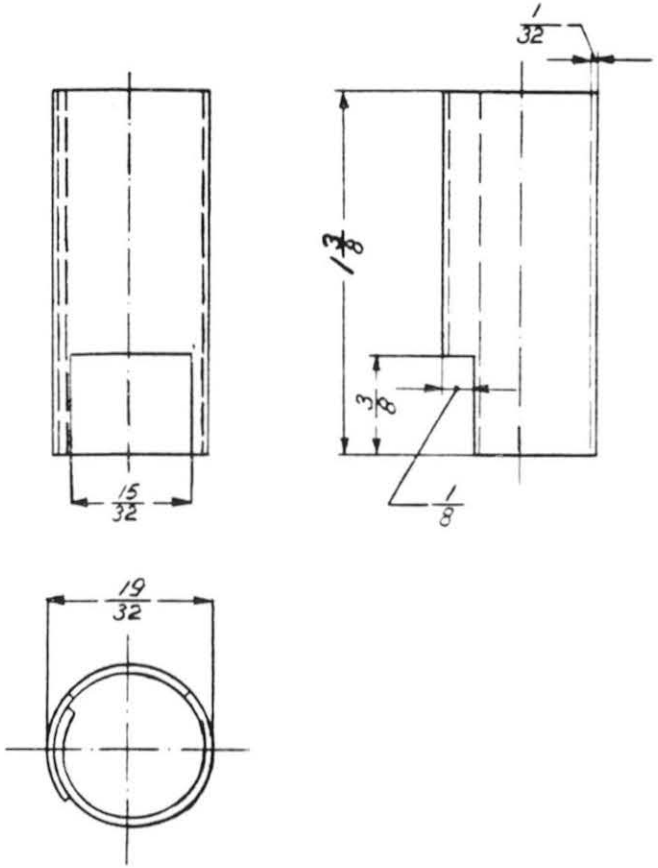

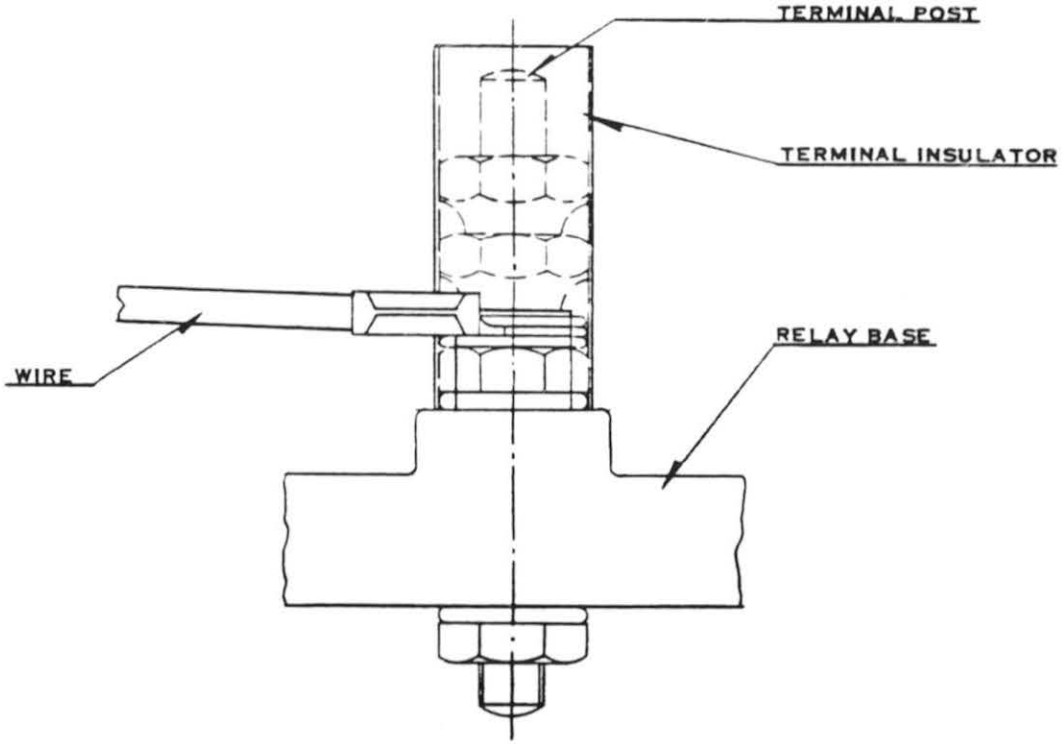

SCALE 2:1

TERMINAL INSULATOR			
TRANSCONTROL CORP. PORT WASHINGTON, N.Y.	DATE 2.7.60	DRAWING BA109	SH. NO 1

TRANSCO T-1 TEST TERMINALS

TRANSCO T-1 Test Terminals are used to provide a quick and convenient opening of a circuit for test purposes, but also provide a reliable connection when closed.

They are very convenient for making current readings in the "charge" and "load" leads to batteries. They also may be used to open all cable wires to make cable megger testing a much easier job.

REFERENCE	DESCRIPTION	CATALOG NO.
	T-1 Test Terminal, complete	T11-001
A	Silver Plated Nut	T11-002
B	Blade for T-1	T11-003
C	Insulated Bushing for T-1	T11-004

USE PLASTIC "SNAPOUT" TAGS

FOR LOWER COST & BETTER APPEARANCE

Make Your Own Plastic Tags in the Field
3 Speedy Operations
Print • Spray • Snapout

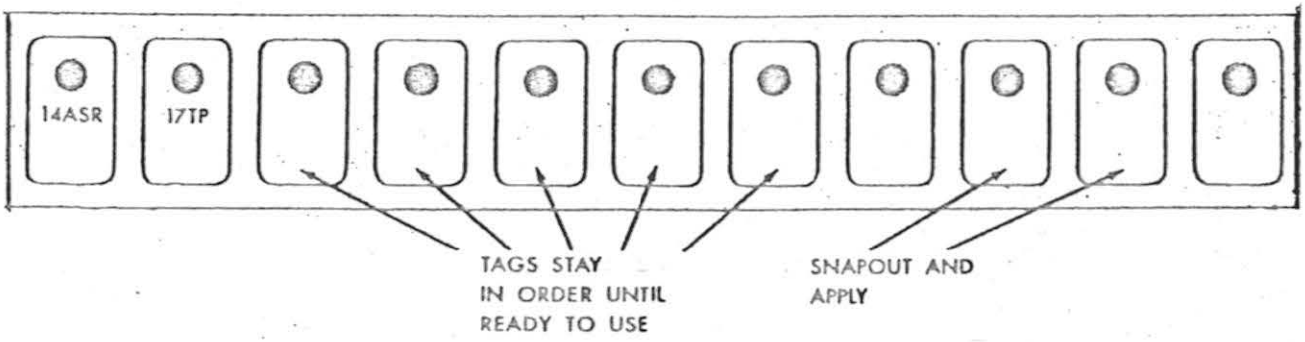

SALIENT FEATURES

- Labor Costs Cut In Half
- More Durable—Longlife
- Better Appearance—Easier
- Impervious To Water, Oil and Grease
- Abrasion Resistant—Flame Resistant
- Available In All Standard Sizes

Actioncraft Products INC.
2 YENNICOCK AVENUE, PORT WASHINGTON, N. Y. 11050 516 883-7444

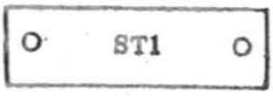

1/2" X 1 5/8"
(1/8 IN. BRAD HOLES)

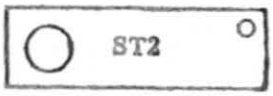

1/2" X 1 5/8"
(1/4 IN. WIRE HOLE)
(1/8 IN. BRAD HOLE)

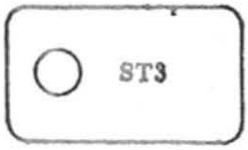

7/8" X 1 1/2"
(1/4 IN. WIRE HOLE)

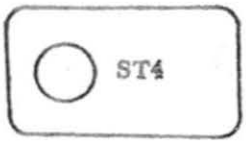

7/8" X 1 1/2"
(3/8 IN. WIRE HOLE)

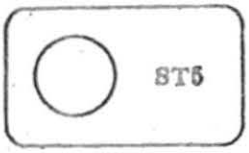

7/8" X 1 1/2"
(1/2 IN. WIRE HOLE)

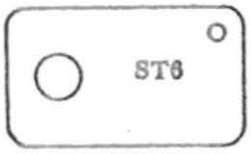

7/8" X 1 1/2"
(1/4 IN. WIRE HOLE)
(1/8 IN. BRAD HOLE)

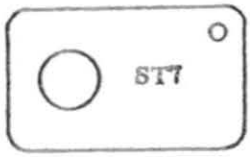

7/8" X 1 1/2"
(3/8 IN. WIRE HOLE)
(1/8 IN. BRAD HOLE)

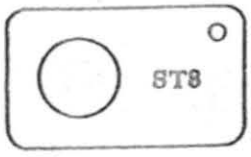

7/8" X 1 1/2"
(1/2 IN. WIRE HOLE)
(1/8 IN. BRAD HOLE)

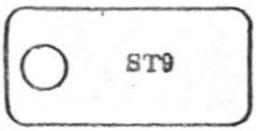

3/4" X 1 1/2"
(1/4 IN. WIRE HOLE)

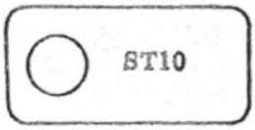

3/4" X 1 1/2"
(3/8 IN. WIRE HOLE)

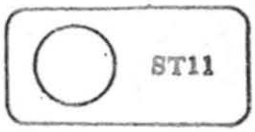

3/4" X 1 1/2"
(1/2 IN. WIRE HOLE)

3/4" X 15/16"
(1/4 IN. WIRE HOLE)

3/4" X 15/16"
(3/8 IN. WIRE HOLE)

3/4" X 15/16"
(1/2 IN. WIRE HOLE

3/4" DIA.
(1/4 IN. WIRE HOLE)

1/2 IN.
WIDE

LENGTH AS REQUIRED
(3/16 X 1/2 IN. WIRE HOLES)

Actioncraft Products INC.
2 YENNICOCK AVENUE, PORT WASHINGTON, N.Y. 11050 516 883-7444

Thread one or more markers on the applicator

Permatag

SPLIT SLEEVE WIRE MARKERS

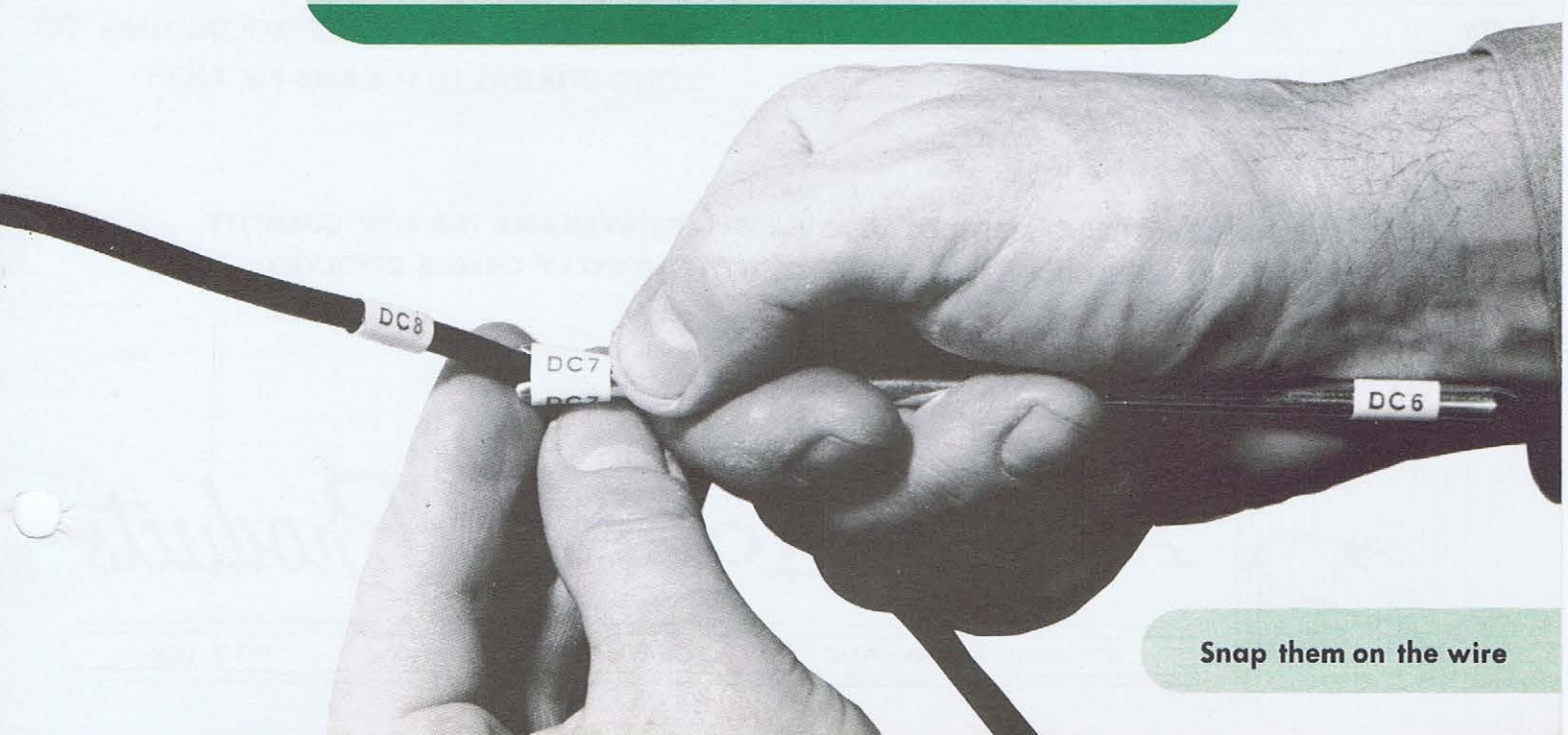

Snap them on the wire

ORDERING REFERENCES FOR SPLIT SLEEVE PERMATAGS

Diameter of wire over insulation Minimum	Maximum	Permatag Part No.	Applicator Tool No.
.030	.034	88178	701
.035	.041	88153	702
.042	.049	88154	703
.050	.058	88155	704
.059	.068	88156	705
.069	.080	88158	706
.081	.094	88159	707
.095	.106	88160	708
.107	.124	88162	709
.125	.145	88163	710
.146	.170	88164	711
.171	.199	88166	712
.200	.232	88167	713
.233	.270	88168	714
.271	.314	88169	715
.315	.366	88170	716
.367	.425	88171	XX*
.426	.494	88172	XX*
.495	.574	88173	XX*
.575	.668	88174	XX*
.669	.775	88175	XX*
.776	.901	88176	XX*
.902	1.045	88177	XX*

XX* Tool Not Required

Permatag split sleeves are made of vinylite plastic with a clear laminated overlay to protect the printed matter. They offer high resistance to abrasion, water, oil, gasoline, alcohol and most acids, and are vermin and fungus proof.

Permatags may be applied to the wires or cables either before or after lugs have been fastened or connections made.

Custom made for your wire, and with any required nomenclature, they snap on and grip tightly. They will not ride loosely.

It is recommended that when Permatag split sleeves are to be subjected to severe abrasion or temperatures above 65° C, they be welded into a solid sleeve by moistening the seam of the marker with Type 1B Permatag sealer. This welding of the split in the sleeves permits their use in temperature areas up to 105° C.

Permatag Type 1B sealer is available in quarter pints, half pints, pint and quart containers.

PERMATAGS ARE AVAILABLE IN BULK OR LAID OUT IN SEQUENCE ACCORDING TO YOUR WIRING DIAGRAMS OR LISTS

UNIQUE MANUFACTURING METHODS MAKE PERMATAGS AVAILABLE FOR LOW QUANTITY PROTOTYPE REQUIREMENTS AT LOW COST, WITH NO SET-UP CHARGE INVOLVED

For additional information contact

Actioncraft Products

2 YENNICOCK AVENUE PORT WASHINGTON, N.Y. PO 7-4500

ACTIONCRAFT TAGS AND WIRE MARKERS

TRANSCONTROL CORP. cooperates with ACTIONCRAFT PRODUCTS in the supply of all types of tags and wire markers. Requests for quotes or orders for tags should be made to ACTIONCRAFT PRODUCTS, 2 Yennicock Avenue, Port Washington, New York 11050.

The tag types used in railway signaling are:

1. Flat adhesive backed plastic.
2. Snap-out plastic.
3. Curled split-sleeve plastic.
4. Hot-stamped tubing.
5. Hot-stamped shrink tubing.
6. DIY, Do-It-Yourself, Curled plastic.

Type 1, Flat adhesive backed tags, can be used for identifying relays, rectifiers and other equipment by attaching to the device, to the shelf or rack, or to the plug coupler for the device. They can be used on terminal strips for wire nomenclature or terminal number identification. Flat tags can be provided with any desired printing, any size, and with backing to suit any special adhesion requirement.

Type 2, Snap-out tags, are used in the same manner that standard fiber tags have been used, except that they can be written on with pen or pencil. The writing is made permanent by spraying with a special spray. Snap-out tags are available in most standard tag shapes. They can be furnished with adhesive backs, if required.

Type 3, Curled split-sleeve tags, are made to encircle the wire. They can be printed with any nomenclature, either standard or custom for each marker, and can be furnished for any size wire. Use of this tag makes possible wiring systems which greatly reduce wiring labor. This tag can be applied to the wire after the wire is connected. For use where temperatures may exceed 140 degrees F., it is recommended the tag be sealed with a special sealer.

ACTIONCRAFT TAGS AND WIRE MARKERS

Type 4, Hot stamped tubing tags, are made by stamping the desired nomenclature or terminal designations on a piece of plastic tubing. This tag is best for severe environments, but does not have some of the other advantages of type 3.

Type 5, Hot stamped shrink tubing tags, are similar to type 4 except that the tubing used is shrink tubing, which shrinks when heated. It is very useful where marking and insulation of a terminal is desired in one operation.

Type 6, DIY tags, are for use when it is desired to wrap a tag around a wire, similar to type 3, but the marking and application are made under field conditions. Marking is made on a flat, adhesive backed plastic tag with pen or pencil. After spraying to protect the marking, the tag is wrapped around the wire. It must then be set by use of a heat gun which blows hot air on the tag.